THIS COPY IS PROVIDED ON A RESTRICTED BASIS AND IS NOT TO BE USED IN ANY WAY DETRIMENTAL TO THE INTERESTS OF PANDUIT CORP.

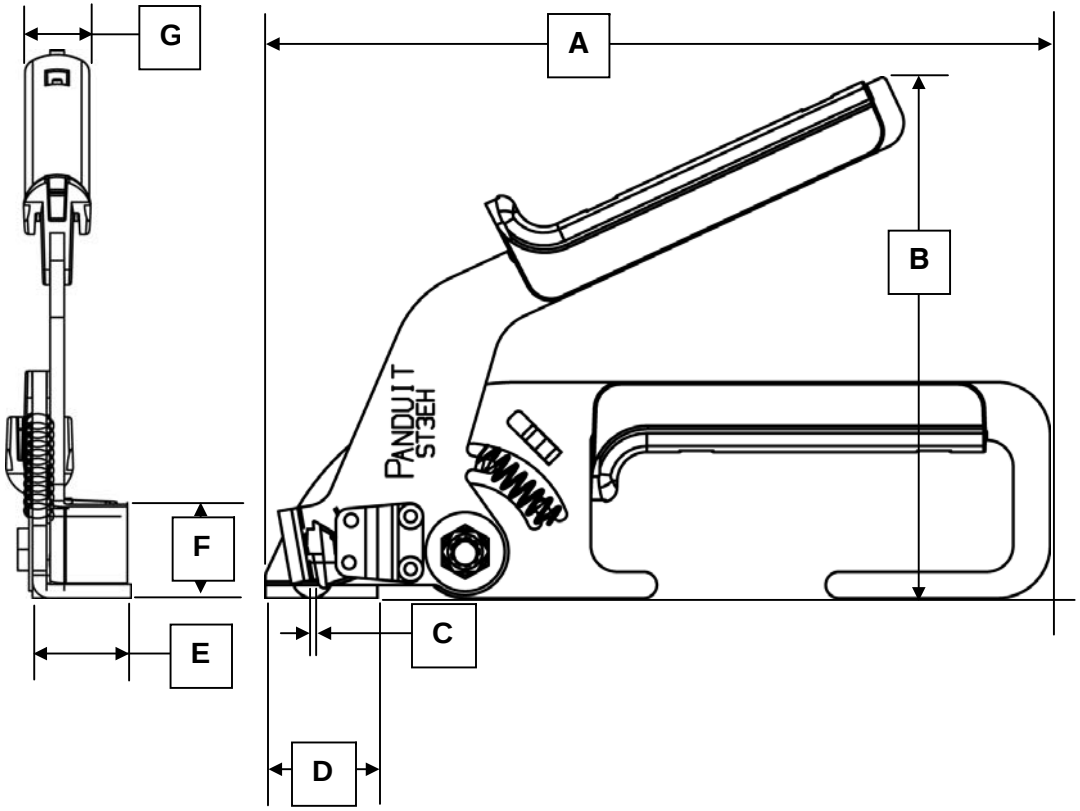

SPECIFICATIONS:

PANDUIT TOOL NO: ST3EH
TOOL WEIGHT: 9 oz. (256 gr.)

INSTALLS ALL LH, H, & EH CROSS SECTION CABLE TIES.

CABLE TIE CROSS-SECTION CODE:
LH = Light Heavy H = Heavy EH = Extra Heavy

THIS TOOL'S FEATURES INCLUDE:

- Single handle trigger for fast installation
- Cable tie side entry for immediate positioning of tie and tool
- One hand operation – lightweight
- Installer controlled tension
- Cut-off capability with the twist of the wrist
- Easy removal of excess tie

DIMENSIONS SHOWN IN PARENTHESES ARE (mm) METRIC:

A = 7.50	(190.50)	OVERALL LENGTH
B = 5.0	(127.00)	OPEN HANDLE SPAN
C = .098 W x .604 L	(2.49 W x 15.24 L)	TIE ENTRY
D = 1.063	(27.00)	HEIGHT OF HEAD
E = .875	(22.23)	DEPTH OF HEAD
F = .875	(22.23)	WIDTH OF HEAD
G = .50	(12.70)	DEPTH OF HANDLE

F:/rvusers/engdocs-new/cust dwgs/TB25129A01_00 ST3EH CD.doc

REV	DATE	BY	CHK'D	DESCRIPTION	ECN	-R	CUST	SUP
00	4-19-06	BLR	BJPU	RELEASED	4190	--	LAH	

PANDUIT CORP. TINLEY PARK, ILLINOIS

ST3EH CUSTOMER DRAWING

UNLESS OTHERWISE SPECIFIED, DIMENSIONAL TOLERANCES ARE:
(.x) ± --- (.xxx) ± ---
(.xx) ± --- ANGLES ± ---

UNLESS OTHERWISE SPECIFIED, ALL DIMENSIONS ARE GIVEN IN INCHES, THIRD ANGLE PROJECTION.

DRAWN BY: BLR
DATE: 4-19-06
CHK'D: BJPU
MATL: CUSTOMER DRAWING
SCALE: NONE
DRAWING NO. TB25129A01
DWG SIZE: A