was 0922 132 6825
now 0922 232 6825.

316 222.

DIN 41 612 · complementary type 2B

Number of contacts

32

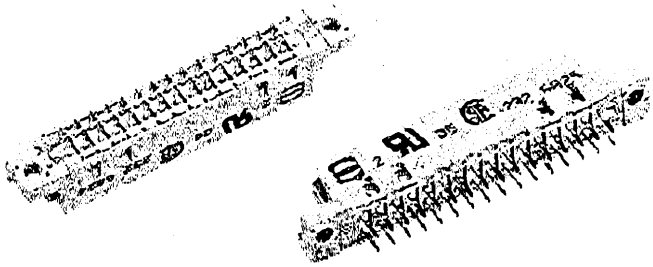

Types signal to 2 A

Female connectors

Identification	Number of contacts	Contact arrangement	Part No. Performance level 2 according to DIN 41 612. Explanation chapter 00
Female connector with solder pins 2.9 mm	32		09 22 232 6824
Female connector with solder pins 4.5 mm	32		09 22 232 6825
Female connector with press-in pins			Part Nos. and variants see chapter 04

Dimensions

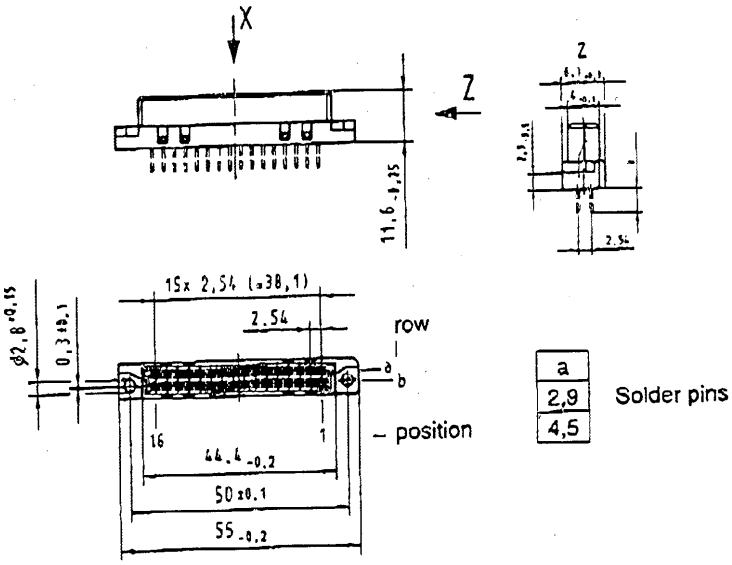

Panel cut out

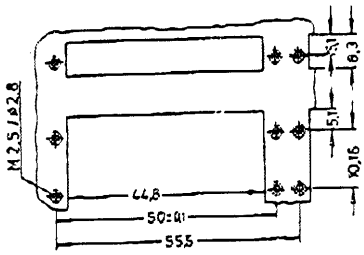

Board drillings

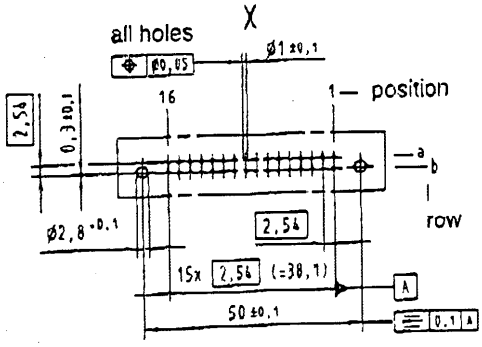

Dimensions in mm

Part Nos. and variants
see chapter 04

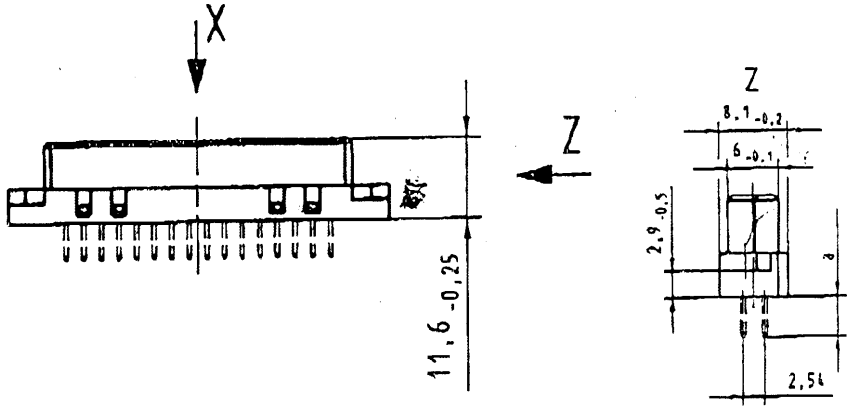

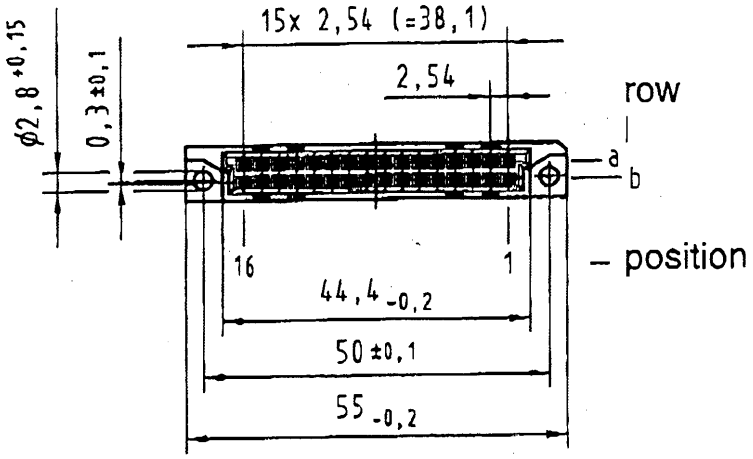

a
2,9
4,5
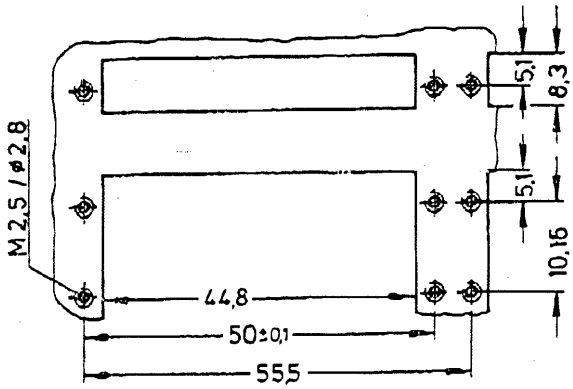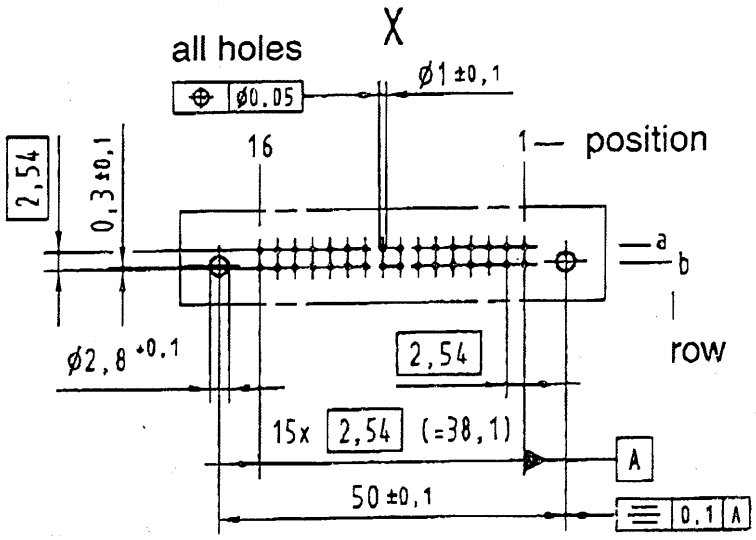
Solder pins