REV	ECO#	DESCRIPTION	DATE

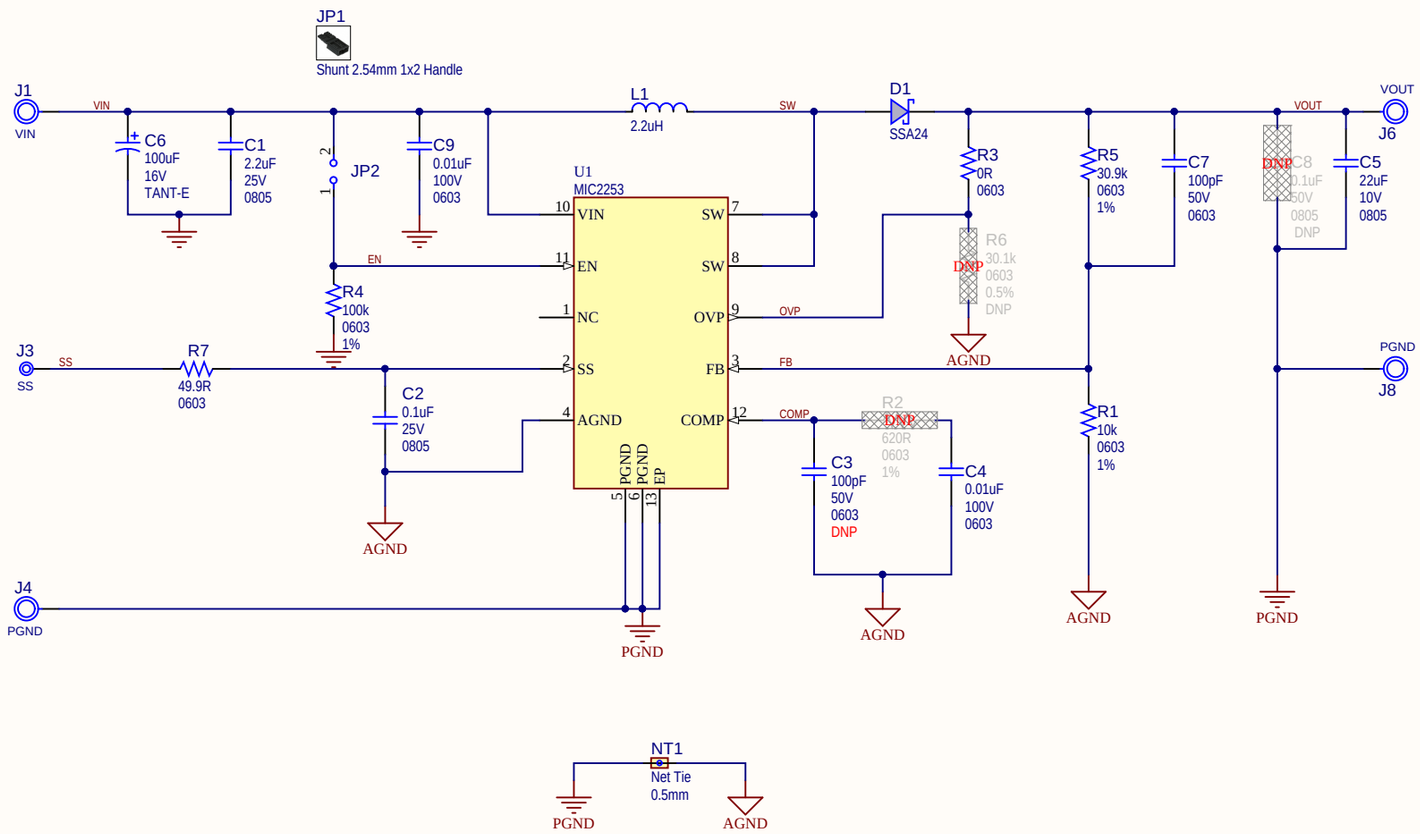

LABEL1

02- -R1
JIT

LABEL Need Help Small

PAD1
Rubber Pad Cyl D7.9H5.3

PAD3
Rubber Pad Cyl D7.9H5.3

PAD2
Rubber Pad Cyl D7.9H5.3

PAD4
Rubber Pad Cyl D7.9H5.3

Drawn By: Alexandru Stoica	MICROCHIP
Engineer: Alexandru Stoica	
PartNumber: MIC2253-06	Project Title: *MIC2253-06YML Evaluation Board*
Sheet Title: MIC2253-06YML Evaluation Board	Designed with Altium.com
Size: B	Sch #:03-10752 / Revision:1 / Date: 10/27/2017 2:38:49 PM / Sheet 1 of 1
File: MIC2253-06YML.SchDoc	