MATERIAL NUMBER	NUMBER OF POSITIONS	PLATING OPTION
44764-0401	04	A
44764-0402	04	B
44764-0403	04	C
44764-0601	06	A
44764-0602	06	B
44764-0603	06	C
44764-0801	08	A
44764-0802	08	B
44764-0803	08	C
44764-1001	10	A
44764-1002	10	B
44764-1003	10	C
44764-1201	12	A
44764-1202	12	B
44764-1203	12	C
44764-1401	14	A
44764-1402	14	B
44764-1403	14	C
44764-1601	16	A
44764-1602	16	B
44764-1603	16	C
44764-1801	18	A
44764-1802	18	B
44764-1803	18	C
44764-2001	20	A
44764-2002	20	B
44764-2003	20	C
44764-2201	22	A
44764-2202	22	B
44764-2203	22	C
44764-2401	24	A
44764-2402	24	B
44764-2403	24	C

NUMBER OF POSITIONS	DIM. "A"	DIM. "B"	DIM. "C"
24	1.445/(36.70)	1.299/(33.00)	1.181/(30.00)
22	1.327/(33.70)	1.181/(30.00)	1.063/(27.00)
20	1.209/(30.70)	1.063/(27.00)	.945/(24.00)
18	1.091/(27.70)	.945/(24.00)	.827/(21.00)
16	.972/(24.70)	.827/(21.00)	.709/(18.00)
14	.854/(21.70)	.709/(18.00)	.591/(15.00)
12	.736/(18.70)	.591/(15.00)	.472/(12.00)
10	.618/(15.70)	.472/(12.00)	.354/(9.00)
8	.500/(12.70)	.354/(9.00)	.236/(6.00)
6	.382/(9.70)	.236/(6.00)	———
4	.264/(6.70)	.118/(3.00)	———

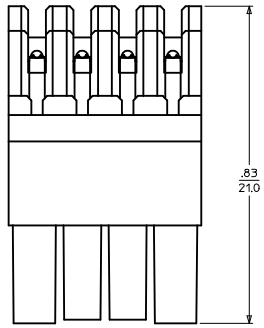

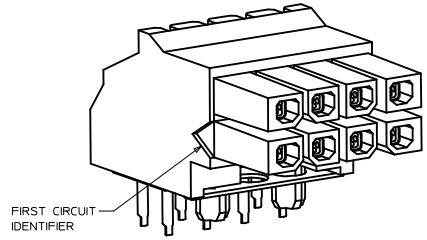

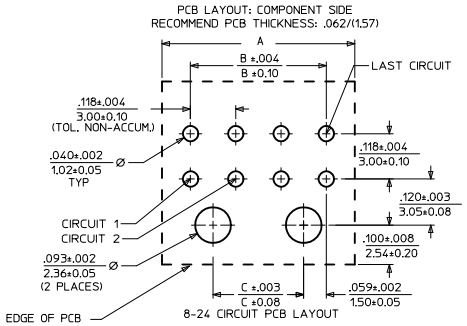

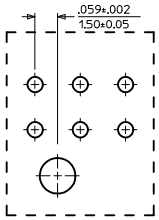

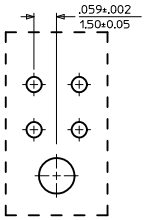

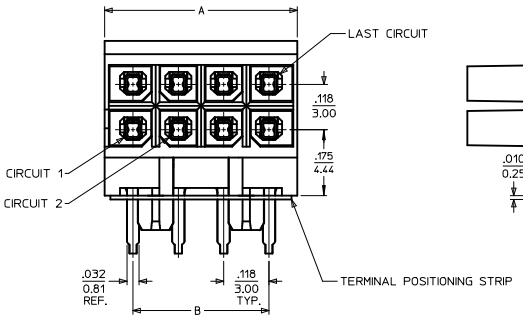

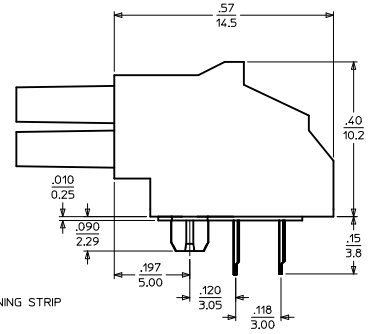

NOTES:
1. MATERIAL:
   HOUSING: LIQUID CRYSTAL POLYMER, GLASS FILLED, U.L. 94V-0, COLOR BLACK
   TERMINAL: PHOSPHOR BRONZE ALLOY
   POSITIONING STRIP: MYLAR, COLOR NATURAL
2. FINISH:
   (A) = HOT TIN DIP: .000040/0.00102 MIN.
   (B) = SELECTIVE GOLD IN THE CONTACT AREA: .000015/0.00038 MIN., SELECTIVE TIN IN THE PC TAIL AREA: .000100/0.00254 MIN., BOTH OVER .000050/0.00127 MIN. NICKEL.
   (C) = SELECTIVE GOLD IN THE CONTACT AREA: .000030/0.00076 MIN., SELECTIVE TIN IN THE PC TAIL AREA: .000100/0.00254 MIN., BOTH OVER .000050/0.00127 MIN. NICKEL.
3. PRODUCT SPECIFICATIONS: PS-44300-001
4. PACKAGING SPECIFICATION: PER MOLEX DRAWING PK-44764-001
5. THIS HEADER MATES WITH MOLEX BMI HEADER SERIES 44428 AND 44432, AND MOLEX BMI PLUG SERIES 44300.
6. MOLEX RECOMMENDS THE USE OF MICRO-FIT TEST PLUG (SERIES 44242) WHENEVER CONTINUITY TESTING IS PERFORMED. TEST PLUGS MUST NOT BE USED TO MAKE OR BREAK UNDER LOAD. MOLEX DOES NOT RECOMMEND USING STANDARD MATING COMPONENTS (SERIES 44428, 44432, OR 44300) FOR TESTING PURPOSES.
7. THIS PART CONFORMS TO CLASS B REQUIREMENTS OF COSMETIC SPECIFICATION PS-45499-002.

NYLON TO LCP
EC NO: UCP2012-1267
DRWN:MMSTROH 2011/10/19
CHKD:SSOUSEK 2011/10/21
APPR:FSMITH 2012/01/03
DESCRIPTION
REV

QUALITY SYMBOLS
A =0
B =0
P =0

GENERAL TOLERANCES (UNLESS SPECIFIED)

	mm	INCH
4 PLACES	± ---	± ---
3 PLACES	± ---	± .010
2 PLACES	± 0.25	± .014
1 PLACE	± 0.35	± ---
ANGULAR ±1/2°		

DRAFT WHERE APPLICABLE MUST REMAIN WITHIN DIMENSIONS

DIMENSION STYLE: IN/MM
SCALE: ---
DESIGN UNITS: METRIC
THIRD ANGLE PROJECTION

		DATE
DRAWN BY	BURLESON	2000/07/13
CHECKED BY	MUELLER	2000/07/13
APPROVED BY	EDGLEY	2000/07/13

TITLE: MICRO-FIT (3.0) BMI R/A RECEPTACLE ASS'Y 4 - 24 CIRCUIT

molex MOLEX INCORPORATED

MATERIAL NO.: SEE CHART
DOCUMENT NO.: SD-44764-001
SHEET NO.: 1 OF 1
SIZE: C

THIS DRAWING CONTAINS INFORMATION THAT IS PROPRIETARY TO MOLEX INCORPORATED AND SHOULD NOT BE USED WITHOUT WRITTEN PERMISSION