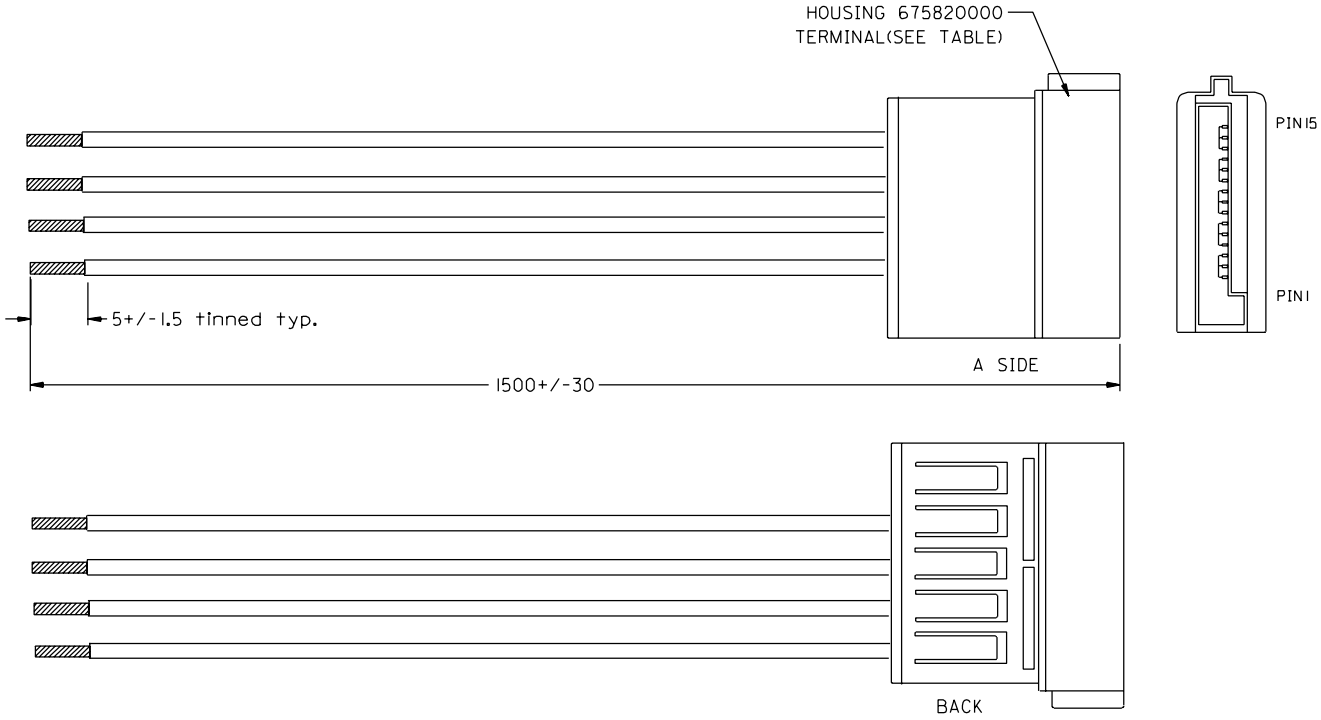

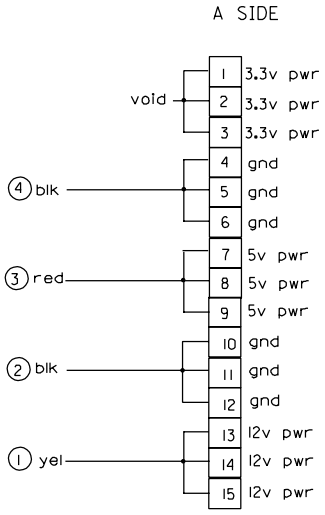

887511411	675810001 30u'
887511410	675810000 GOLD FLASH
MATERIAL NO.	TERMINAL

TABLE

4	UL1007 #18 BLK 887711300
3	UL1007 #18 RED 887711301
2	UL1007 #18 BLK 887711300
1	UL1007 #18 YEL 887711303
item	WIRE TYPE

CONNECTION DIAGRAM

NOTE: 1. ELECTRIC PERFORMANCE:
DIELECTRONIC STRENGTH: 500 V DC/0.01Sec.
INSULATION RESISTANCE: 100M OHMS Min.
CONDUCTIVE RESISTANCE: 2 OHMS Max.
2. HOUSING 675820000:
POLYESTER(PBT), UL94V-0(BLACK)

REV	DESCRIPTION
B	EC NO. DG2003-0009 DRWN: BENTZ 03/04/07 CH'K: BENTZ 03/04/07 APPR: BOCHEN 03/04/07
A	EC NO. DG2003-0005 DRWN: BENTZ 02/08/08 CH'K: BENTZ 02/08/08 APPR: TONY WONG 02/08/08

QUALITY SYMBOLS
MAJOR ▼ =
CRITICAL ▽C = 1

GENERAL TOLERANCES: (UNLESS SPECIFIED)

	mm	INCH
4 PLACES	±0.	±.
3 PLACES	±0.	±.
2 PLACES	±0.	±.
1 PLACE	±0.	±.
ANGULAR: ±		°

SCALE | DESIGN UNITS ☐mm ☐INCH | THIRD ANGLE PROJECTION | DIMENSIONS: ☐ mm/INCH ☐ INCH/mm ☐ mm ONLY | SHT | REV | REVISE ON CAD ONLY

DRAWN BY & DATE: BENTZ 02/08/08
CHECKED BY & DATE: Tony Wong 02/08/08
APPROVED BY & DATE: Tony Wong 02/08/08

TITLE: S-ATA POWER CABLE ASSEMBLY

molex MOLEX INCORPORATED

CAD FILENAME: S88755AB.S01
MATERIAL NO.: SEE TABLE
DRAWING NO.: SD-88755-002
SHEET NO.: 1 OF 1

THIS DRAWING CONTAINS INFORMATION THAT IS PROPRIETARY TO MOLEX INCORPORATED AND SHOULD NOT BE USED WITHOUT WRITTEN PERMISSION.

SIZE A4

WBORD_A.BOR REV A
97/05/14 LEVEL 3