THIS DRAWING IS UNPUBLISHED. RELEASED FOR PUBLICATION -,- .
© COPYRIGHT - By - ALL RIGHTS RESERVED.

LOC	DIST
GP	00

REVISIONS

P	LTR	DESCRIPTION	DATE	DWN	APVD
	U	REVISED PER ECO-12-003967	12APR2012	CJV	CWR

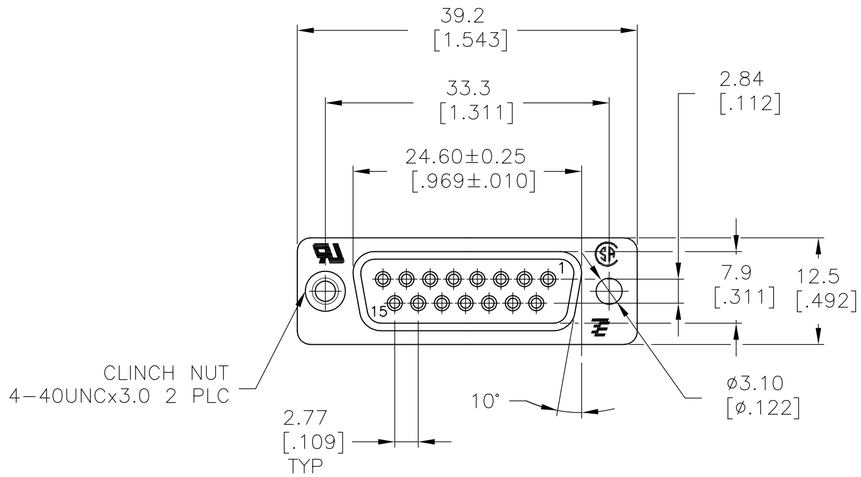

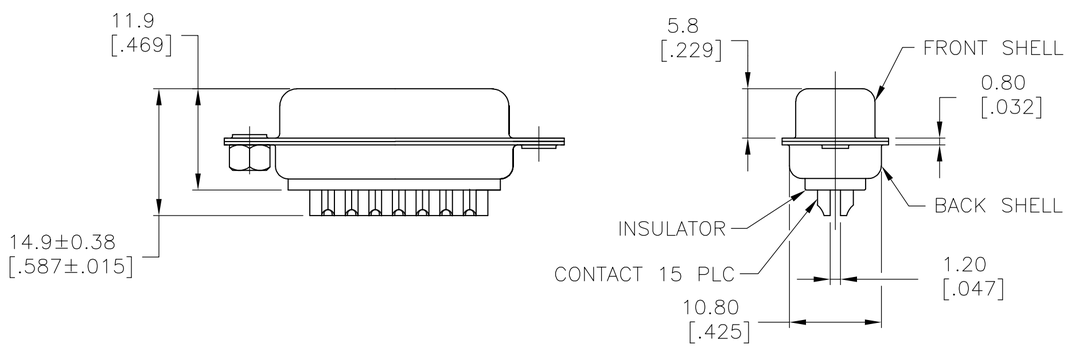

1. MATERIAL:
BACK INSULATOR: PBT, 30 %GF, UL94V-0, BLACK COLOR
FRONT INSULATOR: PBT, 30 %GF, UL94V-0, BLACK COLOR
CONTACT: BRASS
BACK SHELL: STEEL
CLINCH NUTS: BRASS
FRONT SHELL: STEEL

FINISH:
2. CONTACT: GOLD PLATING 0.00002[.0000008] MIN ON CONTACT AREA 0.00229 [.000090] MIN TIN-LEAD PLATING ALL OVER 0.00127[.000050] MIN NICKEL

3. CONTACT: GOLD PLATING 0.00076[.000030] MIN ON CONTACT AREA 0.00229 [.000090] MIN TIN-LEAD PLATING ALL OVER 0.00127[.000050] MIN NICKEL

4. SHELL: BRIGHT TIN 0.0241[.000095] MIN FULL SHELL

5. SHELL: BLUE ZINC: 0.00508[.000200] - 0.00762[.000300] OVER ENTIRE SHELL

6. CONTACT: GOLD PLATING 0.00002[.0000008] MIN ON CONTACT AREA 0.00229 [.000090] MIN HOT DIPPED TIN-COPPER PLATING ALL OVER 0.00127[.000050] MIN NICKEL.

7. CLINCH NUTS: NICKEL PLATING .00305-.00508[.000120-.000200]

8. SPECIFICATION
ELECTRICAL CHARACTERISTICS: CURRENT RATING: 3 AMPERES
DIELECTRIC WITHSTANDING VOLTAGE: AC 1000V r.m.s
INSULATION RESISTANCE: 5000 MEGOHMS MINIMUM AT DC 500V
CONTACT RESISTANCE: 10 MILLIOHMS MAXIMUM.

9. ROHS 2002/95/EC COMPLIANT

10. RECEPTACLE ASSEMBLY MATES WITH ANY 15 POSITION PLUG IN AMPLIMITE SERIES

11. SOLDER CUP WILL ACCOMMODATE 20 MAX AWG WIRE.

12. CONTACT: GOLD PLATING 0.00076[.000030] MIN ON CONTACT AREA 0.00229[.000090] MIN HOT DIPPED TIN-COPPER ALL OVER 0.00127[.000050] MIN NICKEL PLATING

	PACKAGING TYPE	CLINCH NUTS (7)	CONTACTS	SHELLS	PART NO.
(9)	STANDARD	NO	(6)	(5)	5-747909-4
(9)	STANDARD	YES	(6)	(4)	5-747909-7
(9)	STANDARD	NO	(12)	(4)	5-747909-5
(9)	STANDARD	NO	(6)	(4)	5-747909-2
SUPERSEDED TO 5-747909-2 (9)	STANDARD	NO	(6)	(4)	747909-8
SUPERSEDED TO 5-747909-7	STANDARD	YES	(2)	(4)	747909-7
SUPERSEDED TO 5-747909-5	STANDARD	NO	(3)	(4)	747909-5
SUPERSEDED TO 5-747909-4	STANDARD	NO	(2)	(5)	747909-4
SUPERSEDED TO 5-747909-2	STANDARD	NO	(2)	(4)	747909-2

THIS DRAWING IS A CONTROLLED DOCUMENT.
DIMENSIONING AND TOLERANCING PER ASME Y14.5M-2009

DIMENSIONS: mm [INCHES]

TOLERANCES UNLESS OTHERWISE SPECIFIED:
0 PLC ± -
1 PLC ± 0.25
2 PLC ± 0.13
3 PLC ± 0.05
4 PLC ± -
ANGLES ± 4°

MATERIAL (1)

FINISH: SEE TABLE

DWN M.BINNER 03MAR03
CHK R.BENDORF 05MAR03
APVD R.BENDORF 05MAR03
PRODUCT SPEC —
APPLICATION SPEC —
WEIGHT —

TE Connectivity

NAME: RECEPTACLE ASSEMBLY, SOLDER CUP, SIZE 2, 15 POSN, HD-20, AMPLIMITE
—

SIZE	CAGE CODE	DRAWING NO	RESTRICTED TO
A2	00779	C-747909	—

CUSTOMER DRAWING | SCALE 2:1 | SHEET 1 OF 1 | REV U

747909

1471-9 (3/11)