REVISIONS				
SYM	DESCRIPTION	REVISED BY	DATE	APPR

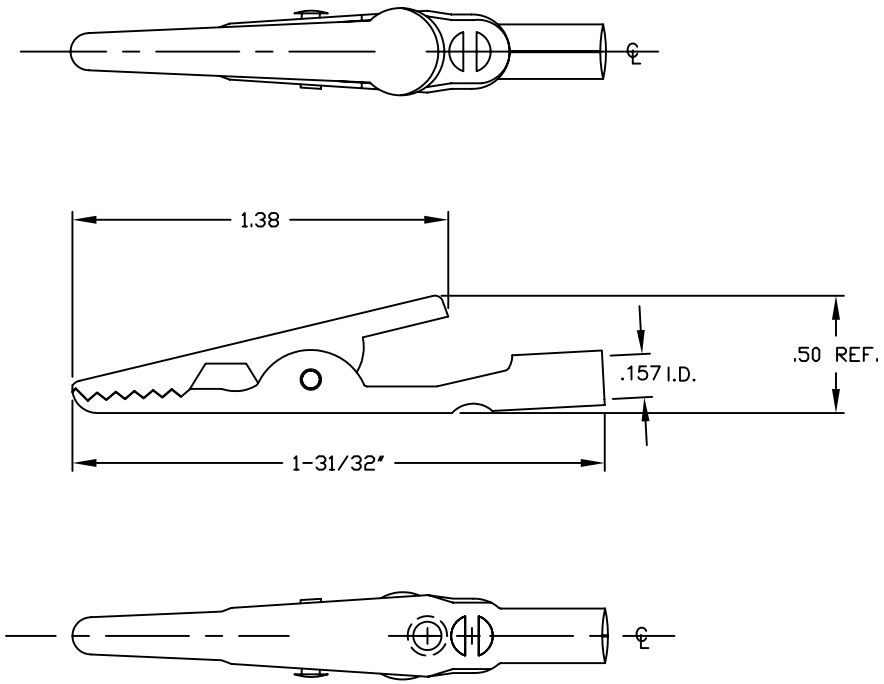

MATERIAL	STEEL	FINISH	BRIGHT TIN
DIMENSIONAL TOLERANCES UNLESS OTHERWISE SPECIFIED		TITLE	300 ALLIGATOR CLIP ASSEMBLY
.XX	.XXX	.XXXX	
---	---		
FRACTIONS	ANGLES	SCALE	
---	---	2:1	
HEAT TREAT			
PLOT SCALE:	1:1		

DRAWN:	T. LORD	DATE	9/29/06
CHECKED:	T. LORD	DATE	9/29/06
APPROVED:	T. LORD	DATE	9/29/06

ABBATRON

Electronic Connectors and Hardware

632 Arch Street, Meadville, Pa. 16335

SIZE	DRAWING NUMBER	ISSUE
B	SD-300	—