PART NO.	REVISIONS								
MC000746	ECN #	REV	DESCRIPTION	DRAWN	DATE	CHECKD	DATE	APPRVD	DATE
	-	1.0	RELEASED	DO	01/04/14	ER	01/04/14	ER	01/04/14

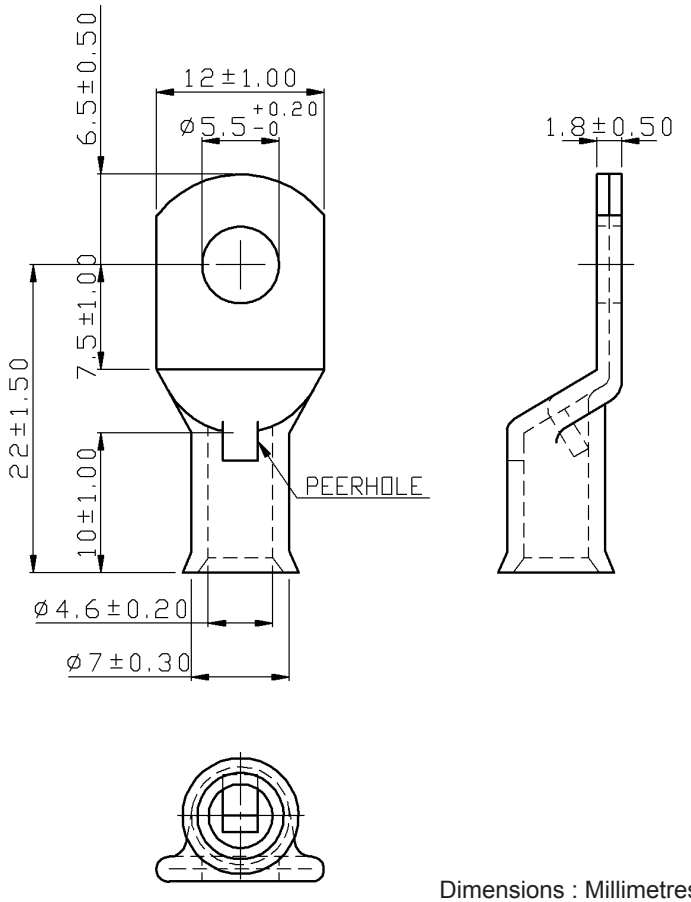

Dimensions : Millimetres

Specifications:

		AWG	8
Maximum Electric Current	:	Amp	70

Wire Range : 8AWG (10mm^2)
Surface Treatment : Tin Plated
Thickness : 1.2mm

Part Number Table

Description	Part Number
Crimp Terminal, Tubular Lug, 10-M5, Flared	MC000746

www.element14.com
www.farnell.com
www.newark.com

Important Notice : This data sheet and its contents (the "Information") belong to the members of the Premier Farnell group of companies (the "Group") or are licensed to it. No licence is granted for the use of it other than for information purposes in connection with the products to which it relates. No licence of any intellectual property rights is granted. The Information is subject to change without notice and replaces all data sheets previously supplied. The Information supplied is believed to be accurate but the Group assumes no responsibility for its accuracy or completeness, any error in or omission from it or for any use made of it. Users of this data sheet should check for themselves the Information and the suitability of the products for their purpose and not make any assumptions based on information included or omitted. Liability for loss or damage resulting from any reliance on the Information or use of it (including liability resulting from negligence or where the Group was aware of the possibility of such loss or damage arising) is excluded. This will not operate to limit or restrict the Group's liability for death or personal injury resulting from its negligence. Multicomp is the registered trademark of the Group. © Premier Farnell plc 2012.

TOLERANCES:

UNLESS OTHERWISE SPECIFIED, DIMENSIONS ARE FOR REFERENCE PURPOSES ONLY.

DRAWN BY:	DATE:
DO	01/04/14
CHECKED BY:	DATE:
ER	01/04/14
APPROVED BY:	DATE:
ER	01/04/14

DRAWING TITLE: Non-Insulated Copper Tubular Lug, Flared

SIZE	DWG NO.	ELECTRONIC FILE	REV
A4	MC000746-01	MC000746	1.0

SCALE: NTS | U.O.M.: mm | SHEET: 1 of 1