THIS DRAWING IS UNPUBLISHED. RELEASED FOR PUBLICATION -,- .
© COPYRIGHT - By - ALL RIGHTS RESERVED.

LOC	DIST
FT	0

REVISIONS

P	LTR	DESCRIPTION	DATE	DWN	APVD
	G2	REVISED PER ECO-14-007950	28MAY2014	NK	MZ

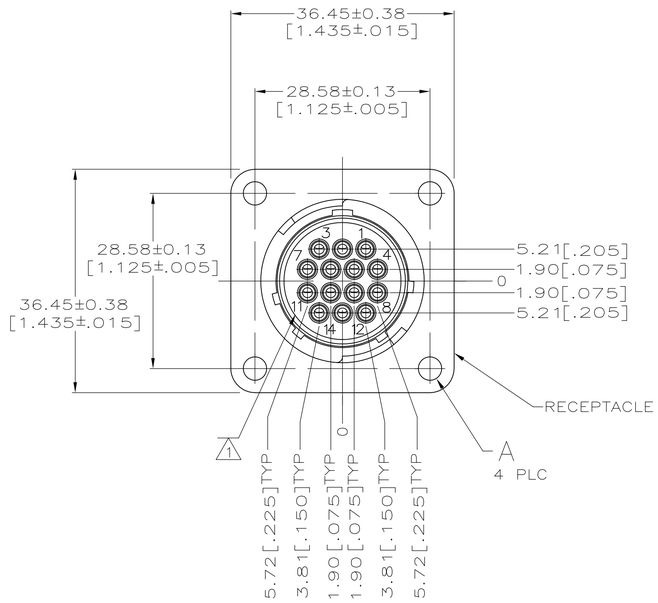

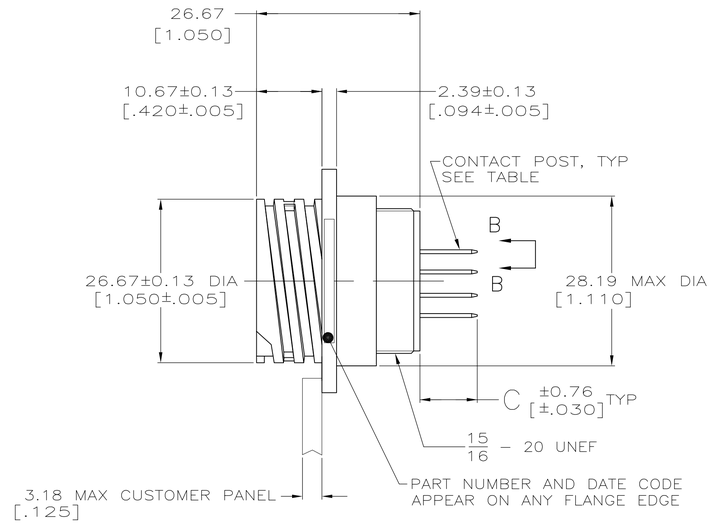

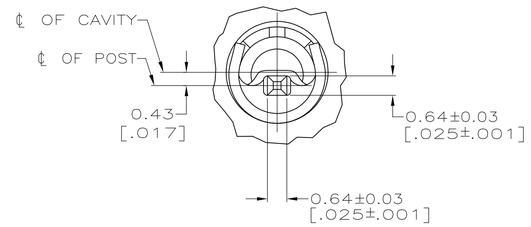

VIEW B–B
SCALE 10:1
TYP

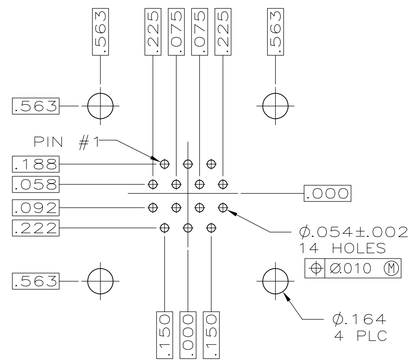

RECOMMENDED P.C. BOARD LAYOUT

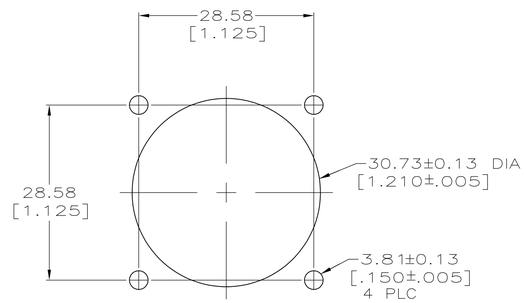

RECOMMENDED PANEL CUTOUT

1. CAVITY IDENTIFICATION CHARACTERS ON FRONT AND REAR FACE.
2. NYLON, UL 94V-0 RATED, BLACK.
3. CONTACT BODY: 0.76um[.000030] MIN GOLD FOR LENGTH OF 5.08[.200] MIN FROM MATING END, WITH REMAINDER TO BE GOLD FLASH, BOTH OVER 1.27um[.000050] MIN NICKEL.
   CONTACT POST: 2.54um[.000100] MIN TIN-LEAD OVER 2.54um[.000100] MIN COPPER.
4. CONTACT BODY: 2.54um[.000100] MIN TIN-LEAD OVER 1.27um[.000050] MIN NICKEL.
   CONTACT POST: 2.54um[.000100] MIN TIN-LEAD OVER 2.54um[.000100] MIN COPPER.
5. CONTACT BODY: 0.76um[.000030] MIN GOLD FOR LENGTH OF 5.08[.200] MIN FROM MATING END, WITH REMAINDER TO BE GOLD FLASH, BOTH OVER 1.27um[.000050] MIN NICKEL.
   CONTACT POST: 2.54um[.000100] MIN TIN OVER 2.54um[.000100] MIN COPPER.
6. CONTACT BODY: 2.54um[.000100] MIN TIN OVER 1.27um[.000050] MIN NICKEL.
   CONTACT POST: 2.54um[.000100] MIN TIN OVER 2.54um[.000100] MIN COPPER.
7. PRELIMINARY PART NUMBER.
8. OBSOLETE PARTS: OBSOLETE CIS STREAMLINING PER D.RENAUD/D.SINISI

	C	A	CONTACT FINISH	PART NUMBER
7	13.82[.544]	4-40 UNC, INSERT, BRASS	5	1-213729-1
7	14.22[.560]	4-40 UNC, INSERT, BRASS	5	1-213729-0
	9.35[.368]	3.81±0.08[.150±.003] DIA	5	213729-9
8 OBSOLETE	4.04[.159]	4-40UNC, INSERT, BRASS	6	~~213729-8~~
8 OBSOLETE	9.35[.368]	3.81±0.08[.150±.003] DIA	6	~~213729-7~~
	9.35[.368]	4-40UNC, INSERT, BRASS	5	213729-6
7	4.04[.159]	3.81±0.08[.150±.003] DIA	4	213729-5
8 OBSOLETE	4.04[.159]	4-40UNC, INSERT, BRASS	4	~~213729-4~~
8 OBSOLETE	9.35[.368]	3.81±0.08[.150±.003] DIA	4	~~213729-3~~
	9.35[.368]	4-40UNC, INSERT, BRASS	3	213729-2
	9.35[.368]	3.81±0.08[.150±.003] DIA	3	213729-1

THIS DRAWING IS A CONTROLLED DOCUMENT.

DIMENSIONS: mm [INCHES]

TOLERANCES UNLESS OTHERWISE SPECIFIED:
0 PLC ± –
1 PLC ± –
2 PLC ± 0.25[.010]
3 PLC ± –
4 PLC ± –
ANGLES ± –

MATERIAL
RECEPTACLE: 2
CONTACT: BRASS

FINISH –

DWN W.G.LENKER 12-3-91
CHK R.STONE 12-11-91
APVD – –
PRODUCT SPEC 108-10024
APPLICATION SPEC 114-10004
WEIGHT –

TE Connectivity

NAME
RECEPTACLE ASSEMBLY, POSTED, SERIES 1, REVERSE SEX, CPC
–

SIZE	CAGE CODE	DRAWING NO	RESTRICTED TO
A1	00779	C-213729	–

CUSTOMER DRAWING SCALE 2:1 SHEET 1 OF 1 REV G2