REVISIONS

P	LTR	DESCRIPTION	DATE	DWN	APVD
	A6	ECR-11-005150	25.3.2011	-	HMR
	A7	ECR-16-004300	22.3.2016	VG	PH

Bottom view

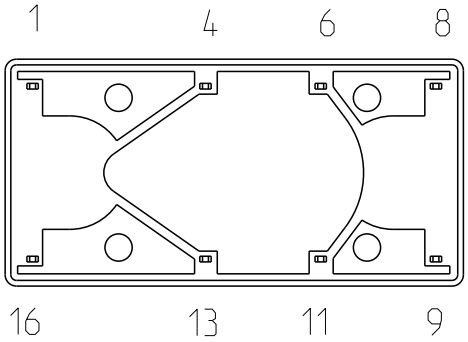

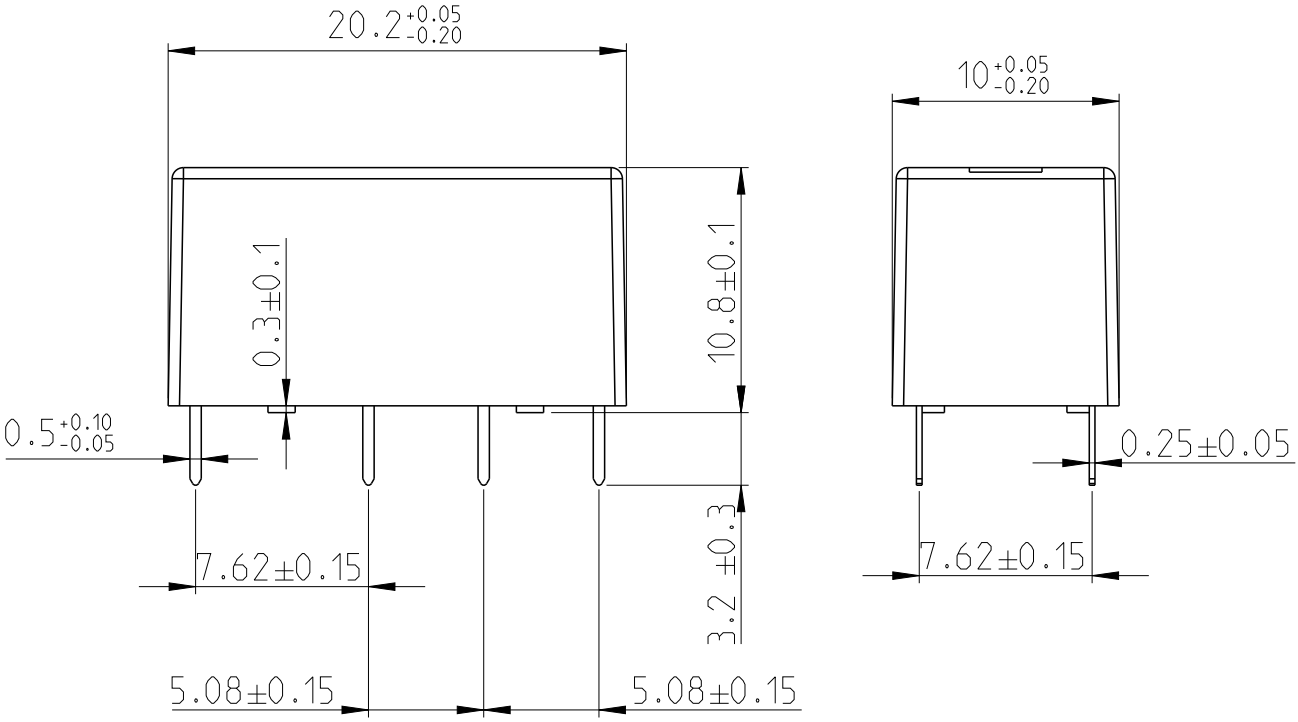

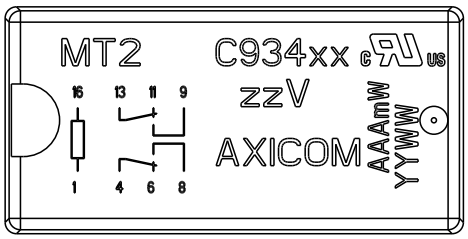

Top view

xx = relay type
zz = nominal voltage
AAA = rated coil power
YYWW = date code

THIS DRAWING IS UNPUBLISHED. © COPYRIGHT copyright_date BY - ALL RIGHTS RESERVED. RELEASED FOR PUBLICATION -

DIMENSIONS: mm	DWN Grbac 22.3.2016	MATERIAL -	FINISH -
TOLERANCES UNLESS OTHERWISE SPECIFIED:	CHK Kaspar -	TE Connectivity	
0 PLC ±-	APVD Hofman -		
1 PLC ±0.1	PRODUCT SPEC -	NAME MT2-Relay	
2 PLC ±0.01			
3 PLC ±0.005	APPLICATION SPEC -	SIZE A4 / CAGE CODE - / DRAWING NO C-1462000-2	RESTRICTED TO -
4 PLC ±0.0001			
ANGLES ±-	WEIGHT -		
CUSTOMER DRAWING		SCALE 3:1 / SHEET 1 OF 1	REV A7

1469-35 (3/13)