Aug.1.2016 Copyright 2016 HIROSE ELECTRIC CO., LTD. All Rights Reserved.

COUNT	DESCRIPTION OF REVISIONS	BY	CHKD	DATE	COUNT	DESCRIPTION OF REVISIONS	BY	CHKD	DATE
				. .					. .
				. .					. .
				. .					. .

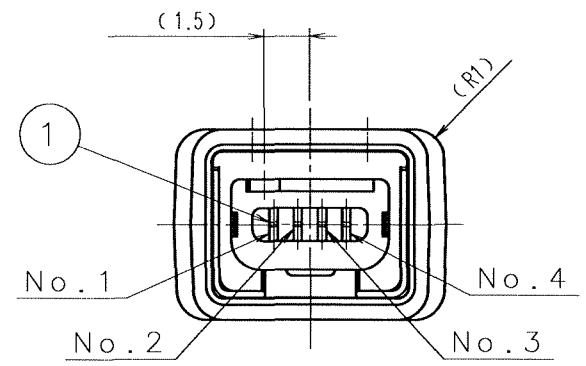

1 CONNECTOR UNIT DRAWING

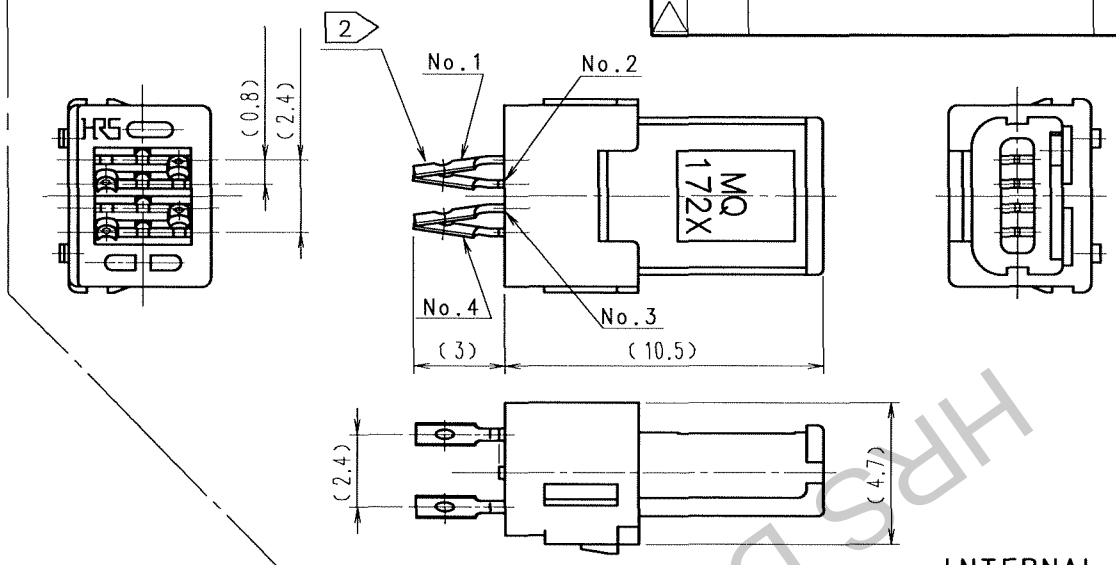

MATING DRAWING (5:1)

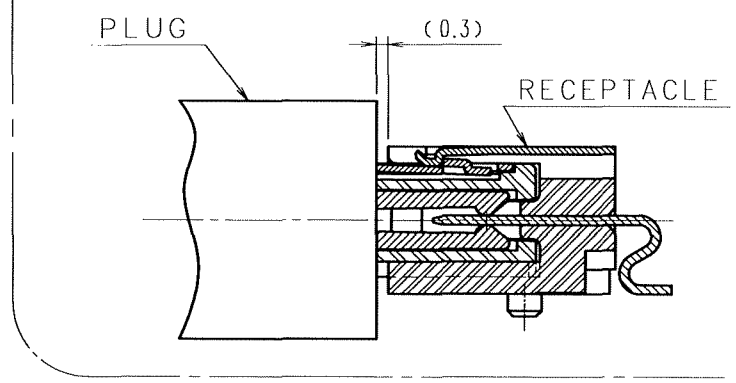

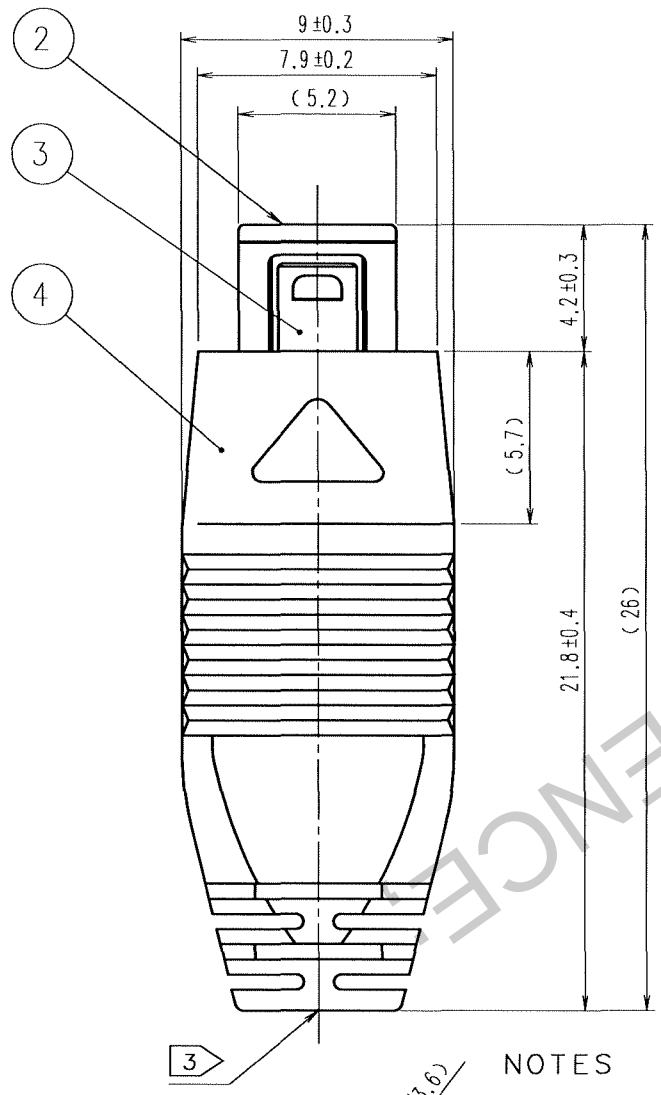

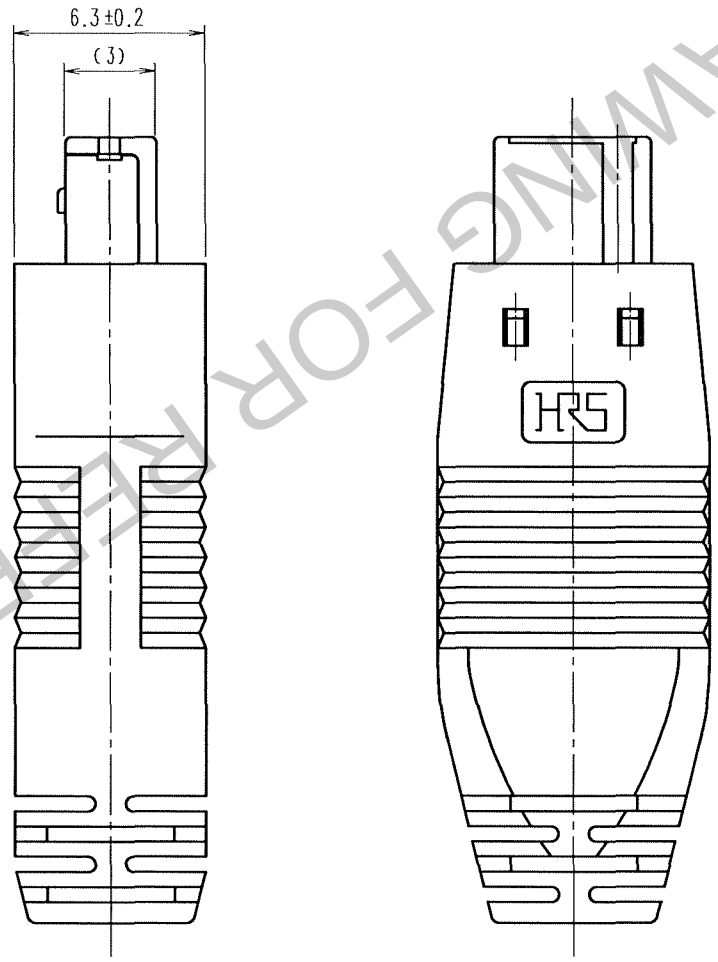

INTERNAL CONSTRUCTION DRAWING (FOR REFERENCE)

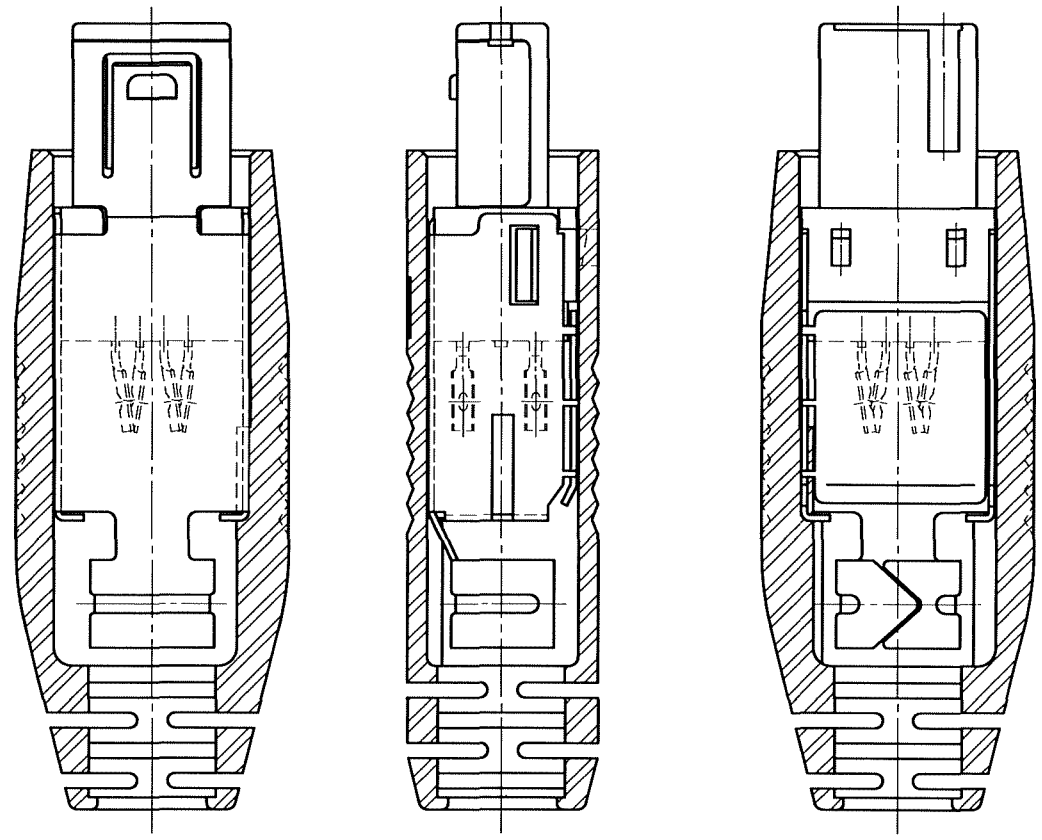

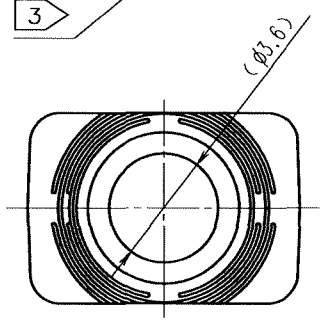

NOTES

1. COMPONENTS OF REF.NO.3 AND NO.4 ARE PACKED SEPARATELY EXCEPT CONNECTOR UNIT WHICH IS ASSEMBLED REF.NO1 AND NO.2.
2. AFTER SOLDERING, TERMINAL AREA SHALL BE COVERD WITH SHRINKABLE TUBE .
3. PROJECTION OF GATE IS 0.8 MAX.
4. USAGE NOTE
   - PLEASE DO NOT USE FOR THE PURPOSE OF INTERRUPTING THE CURRENT.

NO.	MATERIAL	FINISH, REMARKS	NO.	MATERIAL	FINISH, REMARKS
1	COPPER ALLOY	CONTACT AREA: NiPd PLATING 0.7μm MIN. + GOLD PLATING 0.2μm MIN. LEAD AREA: GOLD PLATING 0.03μm MIN. UNDER PLATING: NICKEL PLATING 1.27μm MIN.	4	POLYAMIDE	BLACK UL94V-2
			3	STAINLESS STEEL	
			2	POLYAMIDE	BLACK UL94V-0

CODE NO.(OLD)	DRAWN	DESIGNED	CHECKED	APPROVED	RELEASED
	Y.Sato 06·02·16	K.Nagamuma '06·02·16	N.Miyazaki '06·02·17	'06·02·17	

SCALE 4 : 1
UNITS mm

DRAWING NO. EDC3-120843-01

HRS HIROSE ELECTRIC CO.,LTD.

PART NO. MQ172X-4SA-CV(50)

CODE NO. CL206-2001-9(50)

1/1

FORM NO.229

TO

HRS DRAWING FOR REFERENCE