Aug.1.2016 Copyright 2016 HIROSE ELECTRIC CO., LTD. All Rights Reserved.

	COUNT	DESCRIPTION OF REVISIONS	BY	CHKD	DATE		COUNT	DESCRIPTION OF REVISIONS	BY	CHKD	DATE
△					. .	△					. .
△					. .	△					. .
△					. .	△					. .

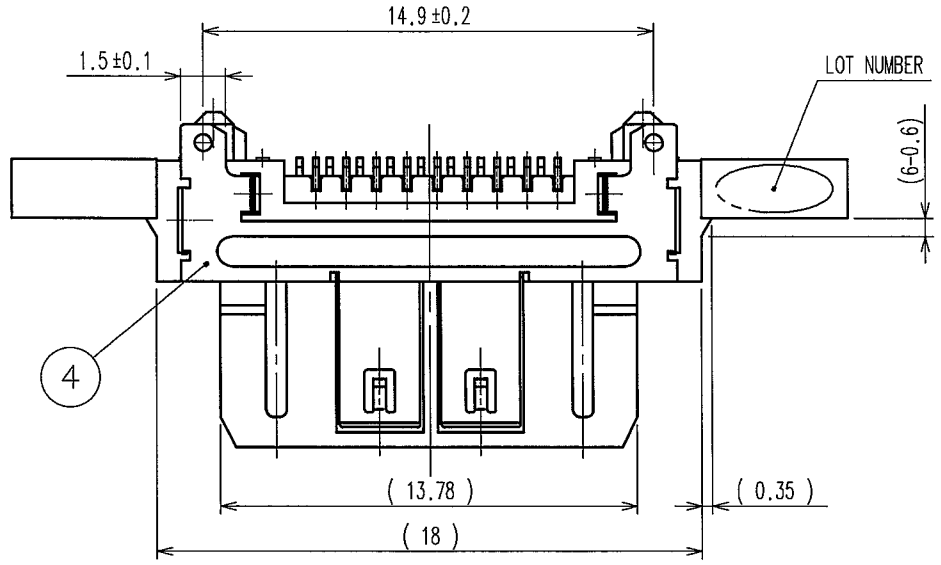

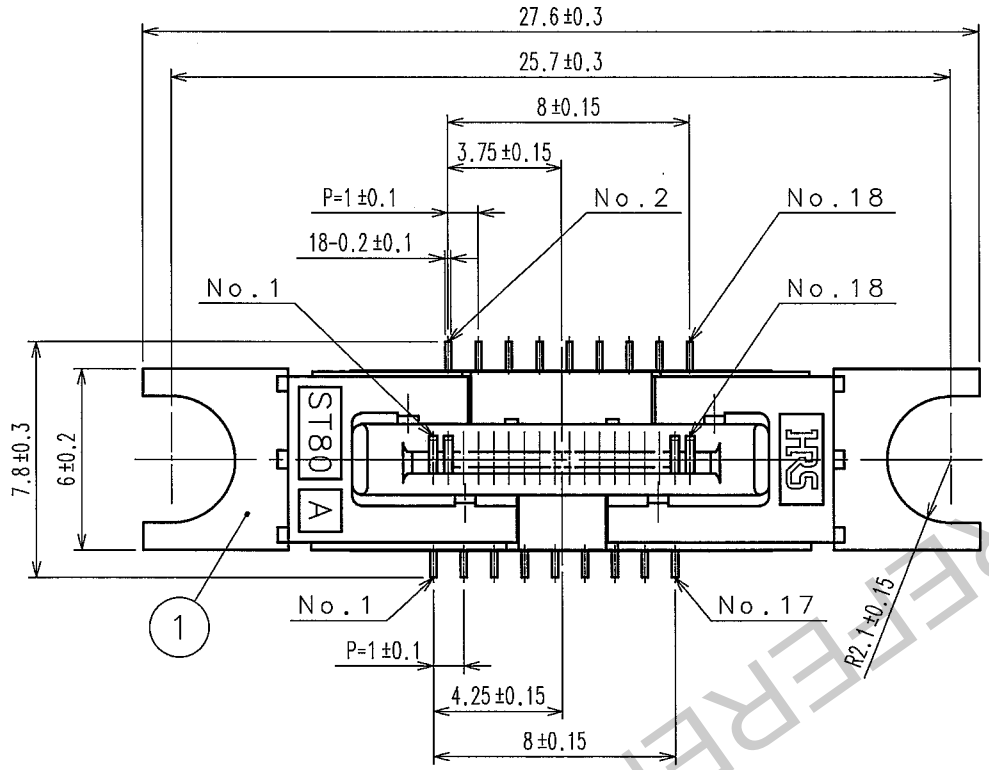

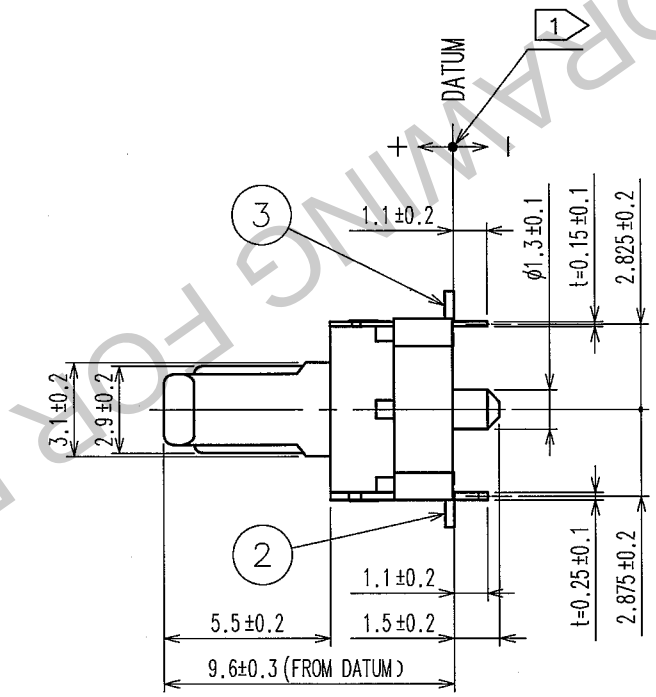

RECOMMENDED PC BOARD HOLE PATTERN(MOUNTING SIDE)

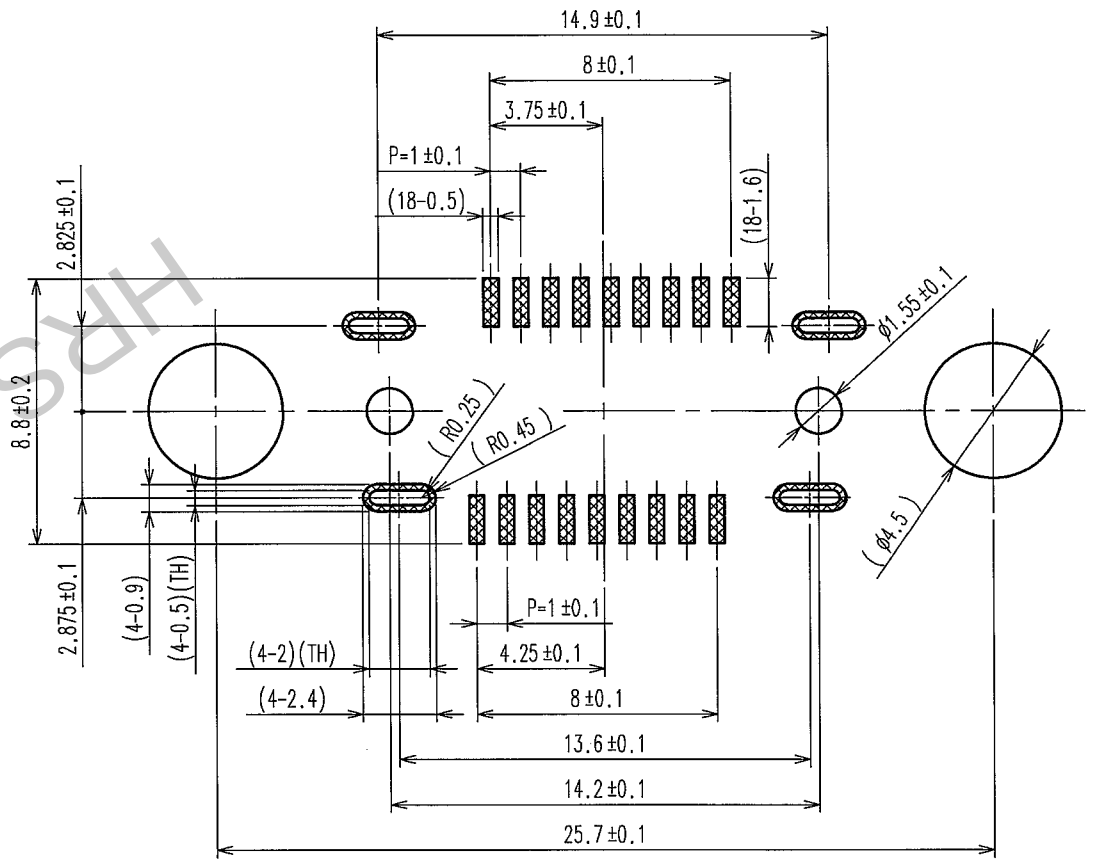

NOTE 1 CO-PLANARITY SPECICATION AS SHOWN IN THE FIG BELOW.

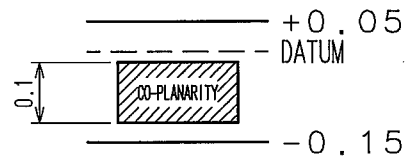

2 1REEL:400 PIECES.

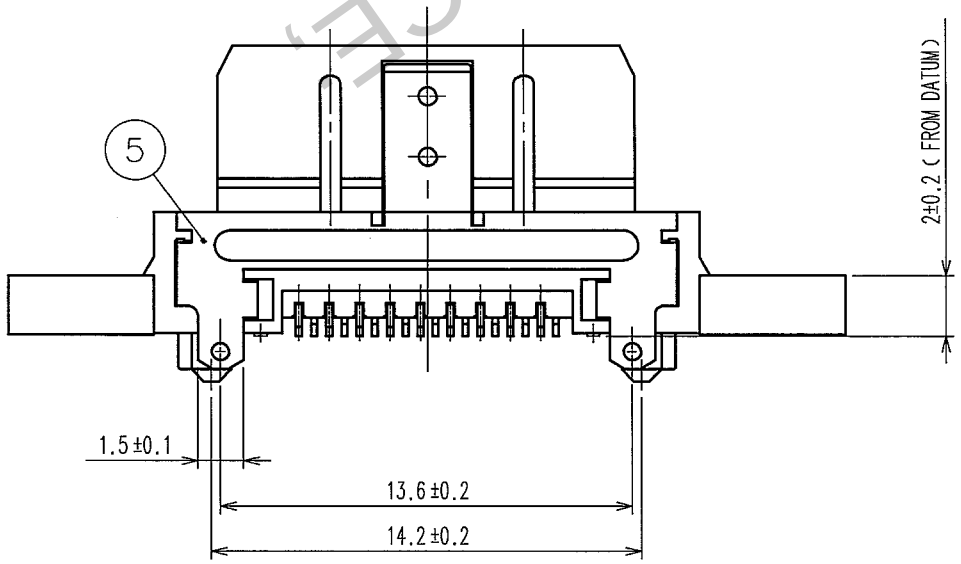

NO.	MATERIAL	FINISH, REMARKS	NO.	MATERIAL	FINISH, REMARKS
3	COPPER ALLOY	CONTACT AREA: SELECTIVE GOLD PLATING SOLDERING AREA: GOLD FLASH	8	PS	
			7	PS	
2	COPPER ALLOY	CONTACT AREA: SELECTIVE GOLD PLATING SOLDERING AREA: GOLD FLASH	6	PA	(BLACK) UL94V-0
			5	STAINLESS STEEL	TIN PLATING
1	PA	(BLACK) UL94V-0	4	STAINLESS STEEL	TIN PLATING

CODE NO.(OLD)	DRAWN	DESIGNED	CHECKED	APPROVED	RELEASED
	H. Yamaha 03.12.16	H. Yamaha 03.12.16	03.12.16	03.12.16	. .

SCALE 4 : 1	DRAWING NO. EDC3-123914-01	PART NO. ST80X-18S(50)
UNITS mm	HRS HIROSE ELECTRIC CO., LTD	CODE NO. CL241-0020-0-50 1/2

TO
Q

HRS DRAWING FOR REFERENCE

FORM NO.229 Q2

Aug.1.2016 Copyright 2016 HIROSE ELECTRIC CO., LTD. All Rights Reserved.

	COUNT	DESCRIPTION OF REVISIONS	BY	CHKD	DATE		COUNT	DESCRIPTION OF REVISIONS	BY	CHKD	DATE
△					. .	△					. .
△					. .	△					. .
△					. .	△					. .

MOUNTING CAP ASSEMBLY

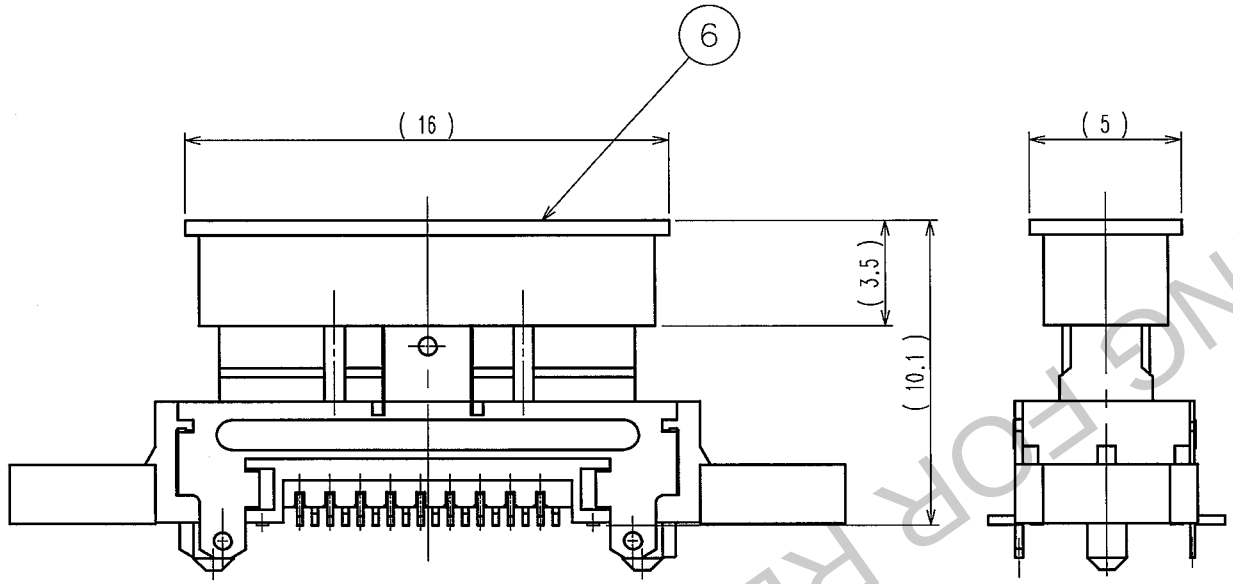

2 FIGURE FOR PAKAGING (Free)

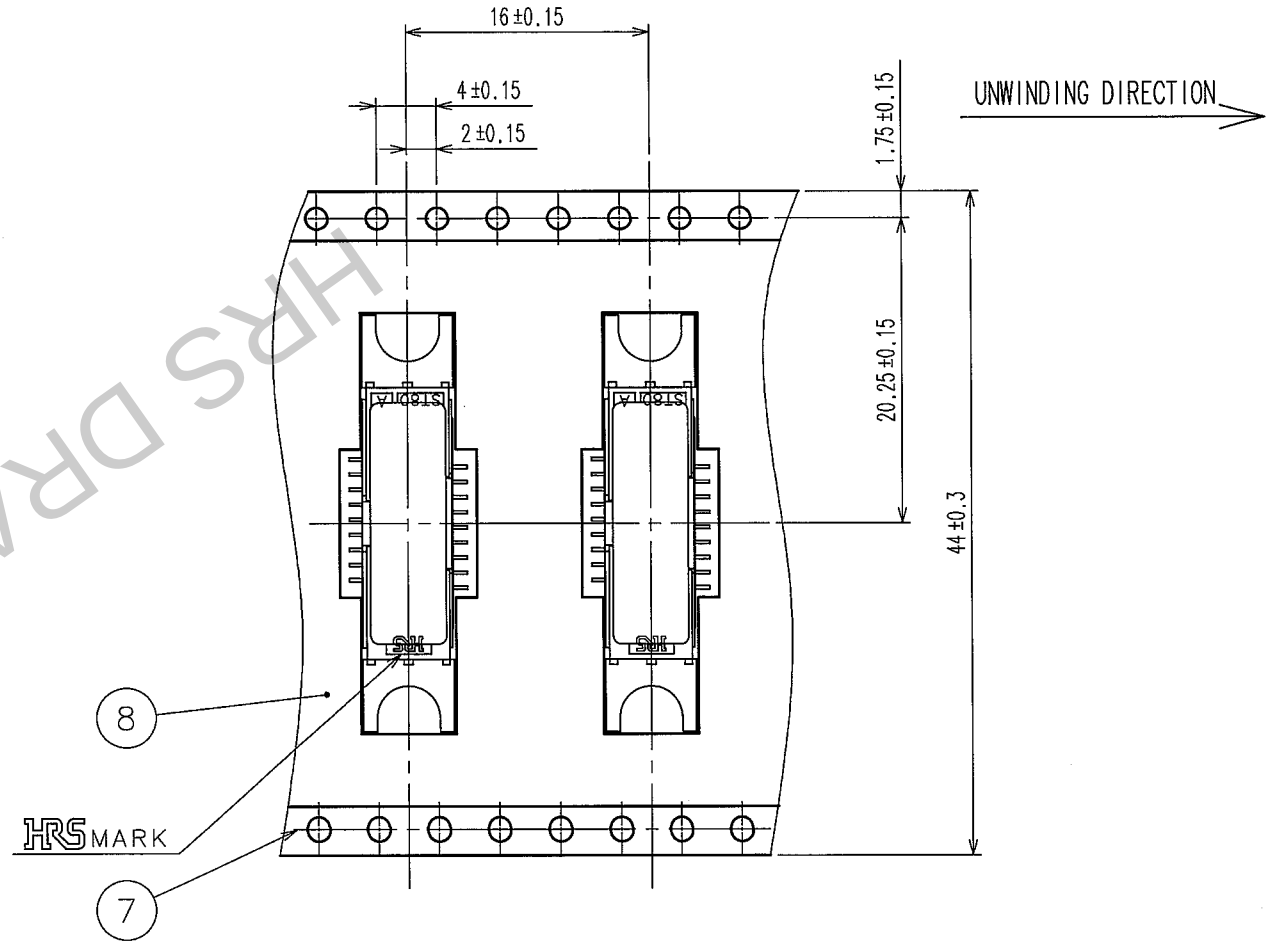

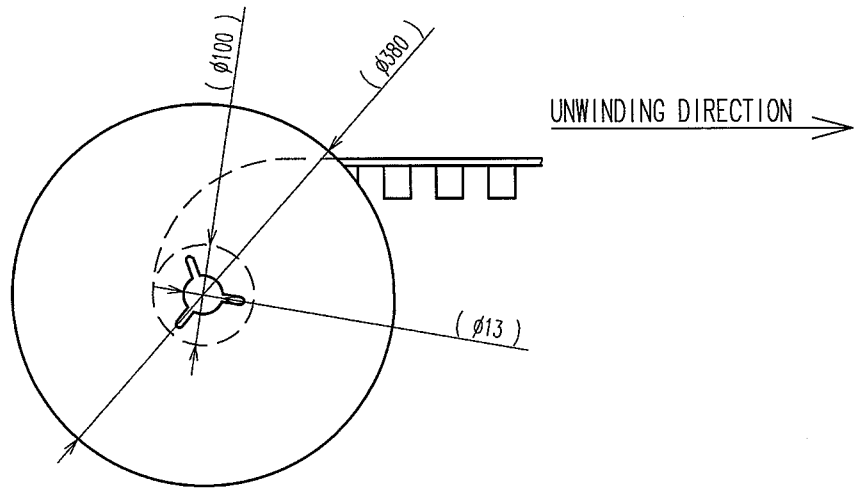

HRS DRAWING FOR REFERENCE.

TO
Q

CODE NO.(OLD)	DRAWN	DESIGNED	CHECKED	APPROVED	RELEASED
	H. Tanaka 03.12.16	H. Tanaka 03.12.16	03.12.16	03.12.16	. .

SCALE 4 : 1	DRAWING NO. EDC3-123914-01	PART NO. ST80X-18S(50)
UNITS mm	HRS HIROSE ELECTRIC CO., LTD	CODE NO. CL241-0020-0-50 2/2

FORM NO.229