FO-50360-L

CW-C6132

REV	DOCUMENT	CHANGED BY	CHECK
4	202141	GJW 18JAN01	SAV

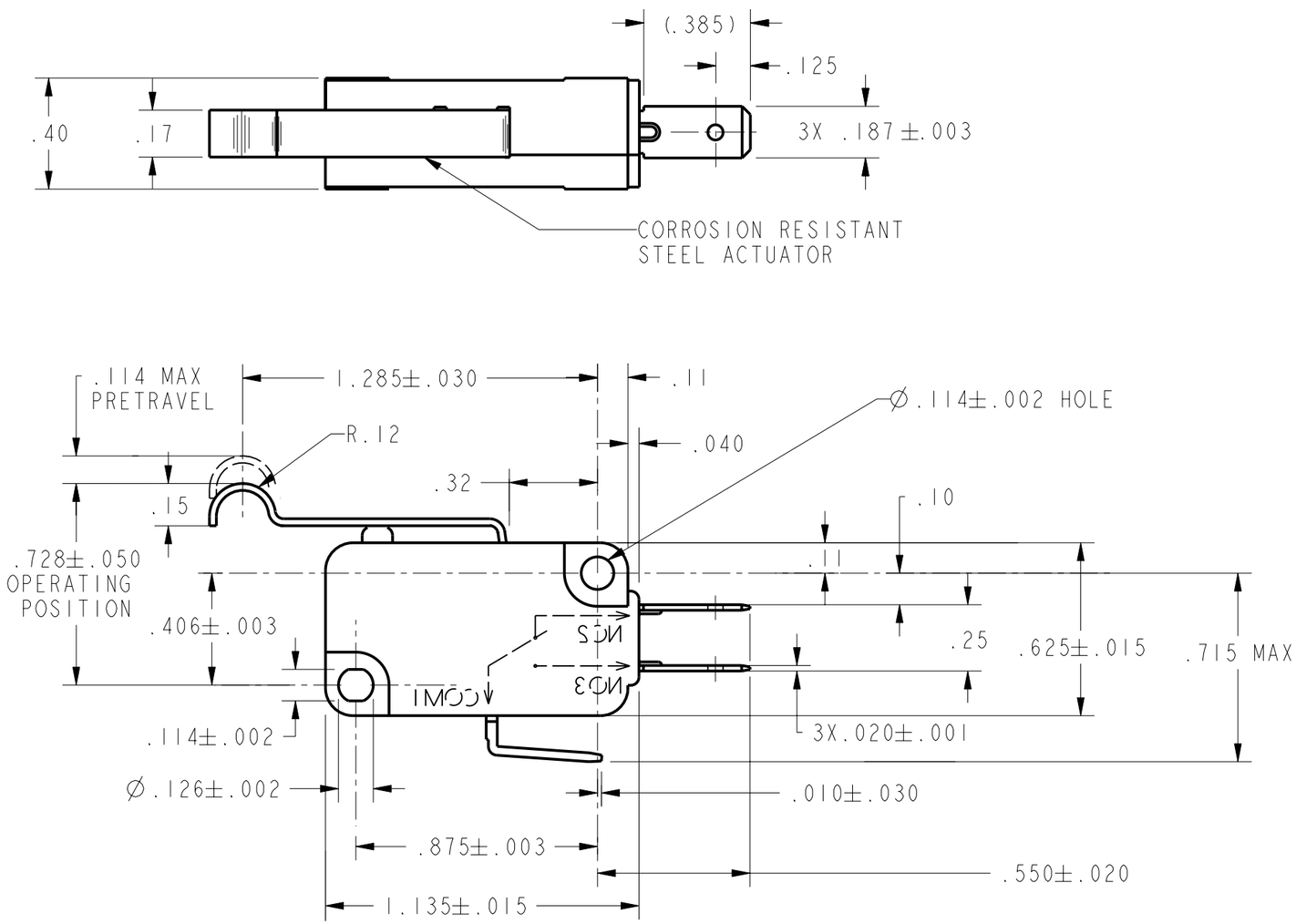

CHARACTERISTICS	
OPERATING FORCE	5 OZ MAX
RELEASE FORCE	1/2 OZ MIN
DIFFERENTIAL TRAVEL	.032 MAX
OVERTRAVEL	.064 MIN
RELEASE TRAVEL	.015 MIN

ELECTRICAL DATA

CONTACT ARRANGEMENT
S P D T

L156
11A 1/3HP 125, 250 OR 277 VAC
1/2A 125 VDC, 1/4A 250 VDC
4A 125 VAC "L"

UNLESS OTHERWISE SPECIFIED TOLERANCES ARE: [X] US(inch) CUSTOMARY [ ] SI(mm) METRIC

NO PLACE	X	±.040	±1
ONE PLACE	.X	±.030	±0.4
TWO PLACE	.XX	±.015	±0.15
THREE PLACE	.XXX	±.005	±
ANGLES		±	±

RAW MATERIAL-COMMERCIAL STANDARD

THIRD ANGLE PROJECTION

DRAWN	GJW	18JAN01
CHECK	SAV	18JAN01

THIS DRAWING COVERS A PROPRIETARY ITEM AND IS THE PROPERTY OF HONEYWELL SENSING AND CONTROL. THIS DRAWING IS NOT TO BE COPIED OR USED WITHOUT THE PERMISSION OF HONEYWELL.

DIMENSIONS ARE TO BE MET BEFORE PROTECTIVE COATINGS ARE APPLIED

PTC 2D | ASME Y14.5M-1994

Honeywell
Sensing and Control

TITLE
SWITCH, BASIC

SIZE	DWG TYPE	DRAWING NAME	REV
B	M	V7-7B19D8-263	4

SCALE NONE | WEIGHT | SHEET 1 OF 1