sales@trfastenings.com
www.trfastenings.com

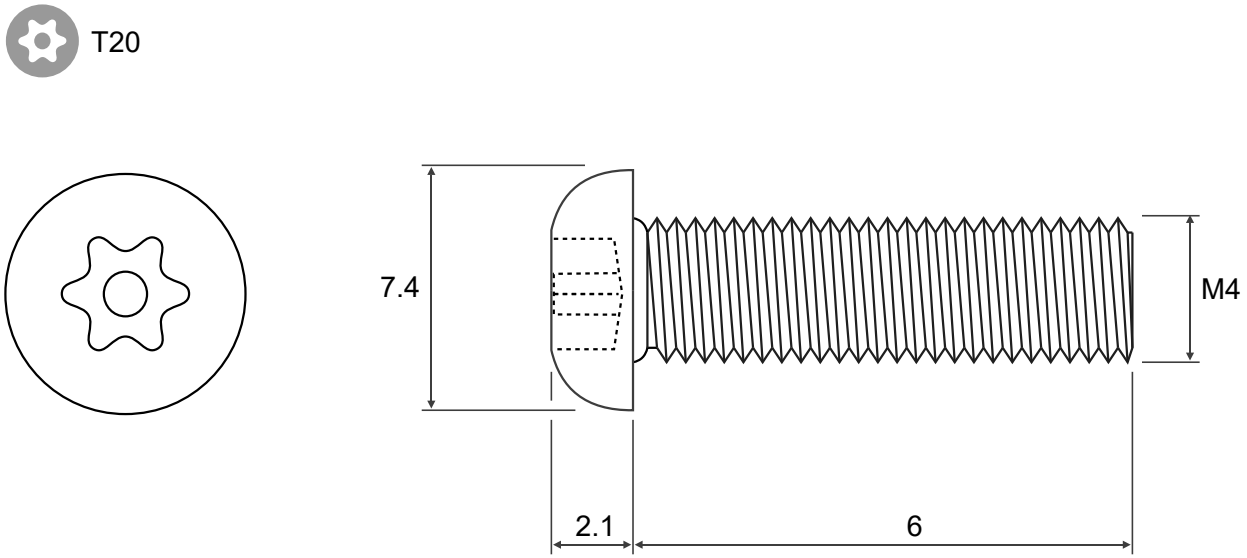

M4 x 6mm Button Head Pin Recess T Drive Machine Screw	Material	A2 Stainless Steel	Customer Part No.	M4 6 M4A2MC S50 BUT
	Finish	Self Colour	Web Ref No	TR00017562-000

Copyright DESIGN RIGHT. TR FASTENINGS LTD. 2018 UNDER NO CIRCUMSTANCES MUST THIS DRAWING BE COPIED OR DISCLOSED WITHOUT FIRST OBTAINING WRITTEN AUTHORITY

UNCONTROLLED COPY

UNLESS OTHERWISE SPECIFIED : DIMENSIONS ARE IN MILLIMETERS