THIS DRAWING IS UNPUBLISHED. RELEASED FOR PUBLICATION -,- .
© COPYRIGHT - By - ALL RIGHTS RESERVED.

LOC	DIST
FT	0

REVISIONS

P	LTR	DESCRIPTION	DATE	DWN	APVD
	A	REVISED PER ECO-13-001939	08NOV2013	KH	MB

MATERIAL:
HOUSING: POLYAMIDE 6, UL94V-2.
COLOR: OFF WHITE.
CONTACT: BRASS, TIN PLATED.
WIRE PROTECTOR: STAINLESS STEEL.
SCREW: M5, STEEL, W/ ZINC PLATED NON-HEXAVALENT CHROMATE (CHROME III).

ELECTRICAL:
MAX CURRENT: 65A (UR) 70A (CSA)
OPERATING VOLTAGE: 600V PER UL FILE E60677
WIRE RANGE: 6-14 UL AND 6-22 AWG FOR (CSA)
DIELECTRIC WITHSTAND: 6000V.

ENVIRONMENT:
CONTINUOUS WORKING TEMP.: -35°C TO 100°C.

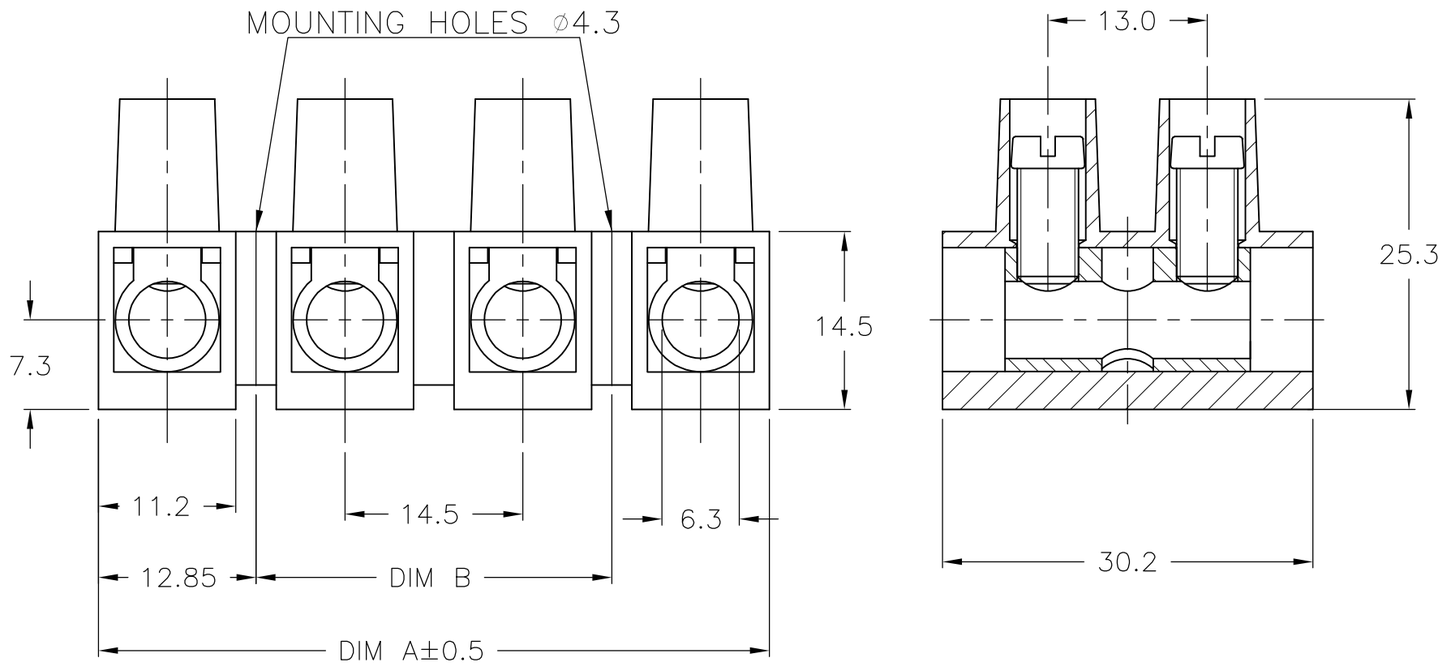

DIM B	DIM A	NO OF POS	CATALOG NUMBER	PART NUMBER
145	170.7	12	TSB200012	1-1776312-2
130.5	156.2	11	TSB200011	1-1776312-1
116	141.7	10	TSB200010	1-1776312-0
101.5	127.2	9	TSB200009	1776312-9
87	112.7	8	TSB200008	1776312-8
72.5	98.2	7	TSB200007	1776312-7
58	83.7	6	TSB200006	1776312-6
43.5	69.2	5	TSB200005	1776312-5
29	54.7	4	TSB200004	1776312-4
14.5	40.2	3	TSB200003	1776312-3
-	25.7	2	TSB200002	1776312-2
-	11.2	1	TSB200001	1776312-1

THIS DRAWING IS A CONTROLLED DOCUMENT.

DIMENSIONS: mm

TOLERANCES UNLESS OTHERWISE SPECIFIED:
0 PLC ± -
1 PLC ± 0.3
2 PLC ± 0.25
3 PLC ± -
4 PLC ± -
ANGLES ± 2°

MATERIAL -
FINISH -

DWN S SCHLEGEL 3/22/05
CHK C RICHARD 3/22/05
APVD C RICHARD 3/22/05
PRODUCT SPEC —
APPLICATION SPEC —
WEIGHT —

TE Connectivity

NAME EUROPA TERMINAL BLOCK, 14.5MM PITCH

SIZE	CAGE CODE	DRAWING NO	RESTRICTED TO
A3	00779	C-1776312	—

CUSTOMER DRAWING | SCALE NTS | SHEET 1 OF 1 | REV A

1470-19 (3/11)