THIS COPY IS PROVIDED ON A RESTRICTED BASIS AND IS NOT TO BE USED IN ANY WAY DETRIMENTAL TO THE INTERESTS OF PANDUIT CORP.

| ASSEMBLY PART NUMBER | ITEM | RAW PART NUMBERS | COLOR | QTY | 'A' | 'B' | 'C' |
|---|---|---|---|---|---|---|---|
| PUME925-3E-C350 | 1 | RPUME925-350 | BLACK | 1 | 0.398 (10.10) | - | - |
| | 2 | PLWS3EH-TL350 | | | - | 12.1 (307) | 0.50 (12.7) |
| PUME925-4E-C350 | 1 | RPUME925-350 | | | 0.398 (10.10) | - | - |
| | 2 | PLWS4EH-TL350 | | | - | 15.1 (384) | 0.50 (12.7) |

RPUME925

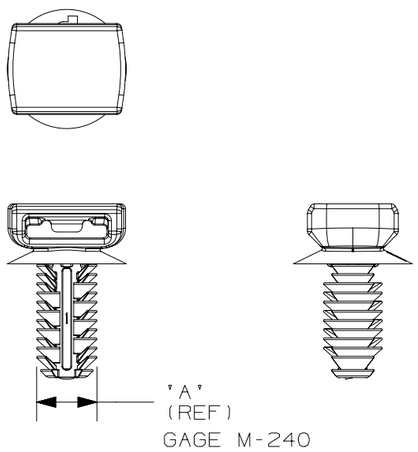


PLWS3EH OR PLWS4EH

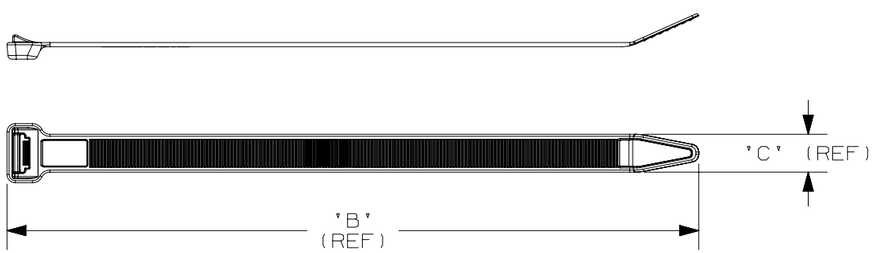


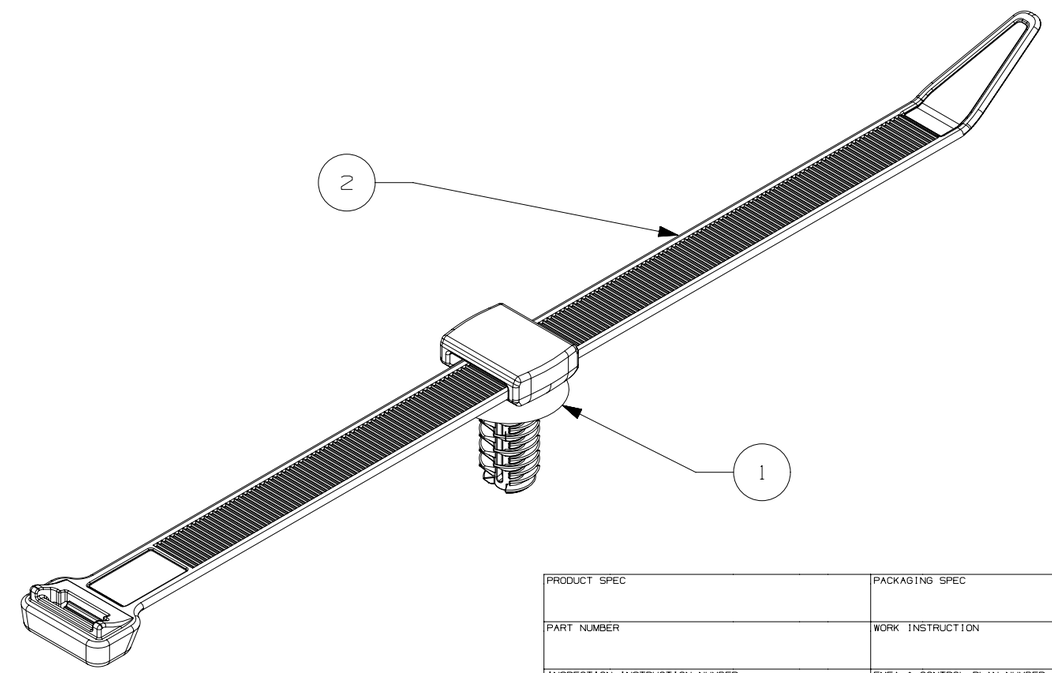


| REV | DATE | BY | CHK | APR | DESCRIPTION | ECN |
|---|---|---|---|---|---|---|
| 03 | 2-13-17 | DJSL | MSAD | | DRAWING RELEASED | 012823/00 |

PRODUCT SPEC

PACKAGING SPEC

PART NUMBER

WORK INSTRUCTION

INSPECTION INSTRUCTION NUMBER

FMEA & CONTROL PLAN NUMBER

TITLE

# HEAVY DUTY UMBRELLA FIR TREE PUSH MOUNT / CABLE TIE ASSEMBLY

INSPECTION DRAWING

ITEM REVISION NAME: 00076SBE/03

DATASET FILE NAME: 00076SBE_DI/REV03

PANDUIT

UNLESS OTHERWISE SPECIFIED, DIMENSIONAL TOLERANCES ARE: IN [mm]

.x ± .1 [2.54] .xxx ± .005 [.127]

.xx ± .01 [.25] ANGLES ± 5 °

THIRD ANGLE PROJECTION

MATERIAL: NYLON 6.6

DRAWING NUMBER: 00076SBE_DI

| DRAWN BY | DATE | CHK | SCALE | | SIZE |
|---|---|---|---|---|---|
| DJSL | 2-13-17 | MSAD | | SHT 1 OF 1 | B |

D10100DB/17