Sep.1.2018 Copyright 2018 HIROSE ELECTRIC CO., LTD. All Rights Reserved.
In case that the application demands a high level of reliability, such as automotive, please contact a company representative for further information.

COUNT	DESCRIPTION OF REVISIONS	BY	CHKD	DATE	COUNT	DESCRIPTION OF REVISIONS	BY	CHKD	DATE
				. .					. .
				. .					. .
				. .					. .

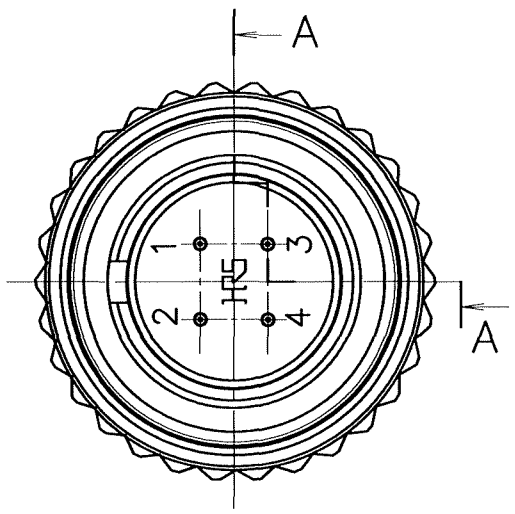

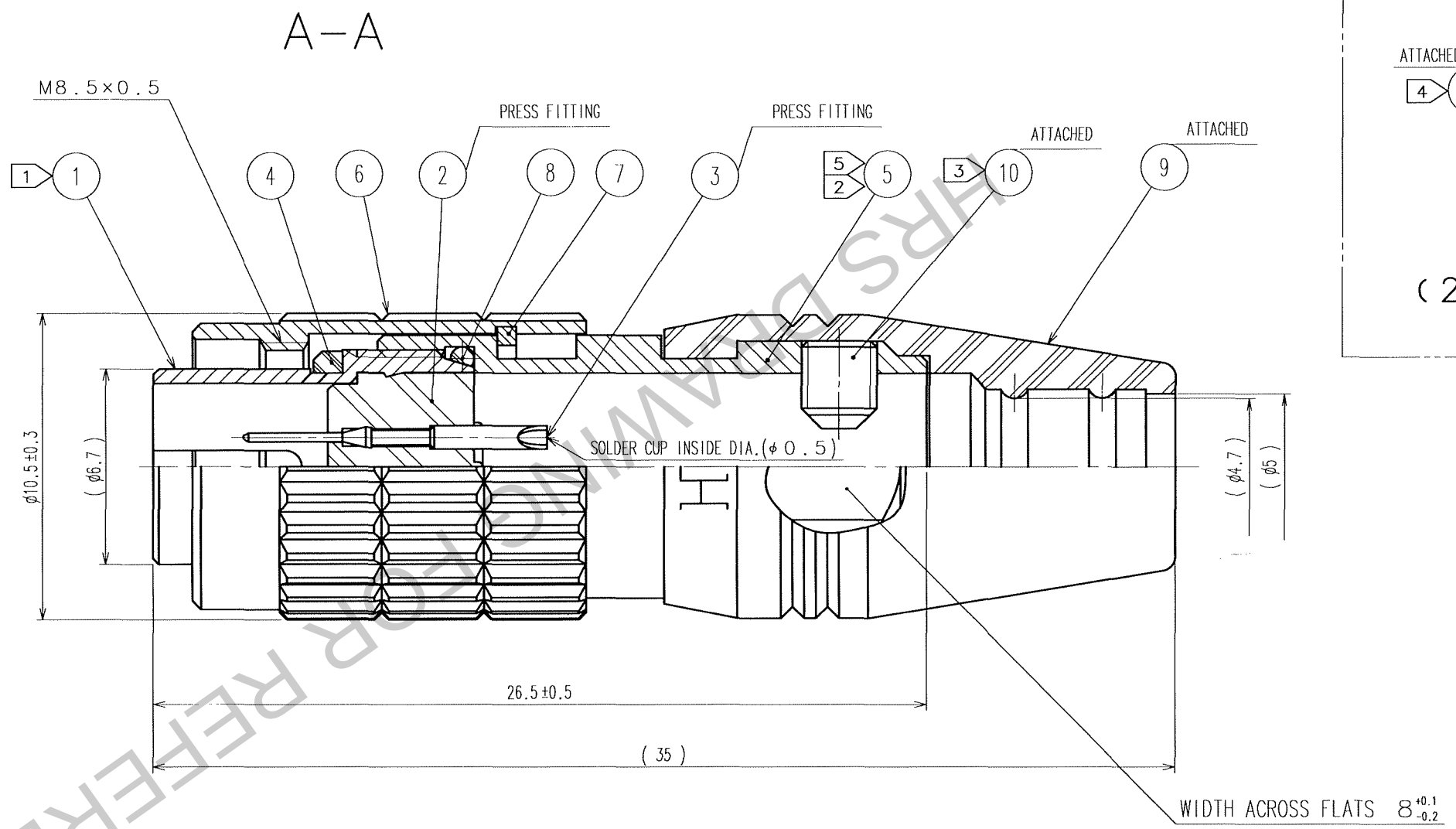

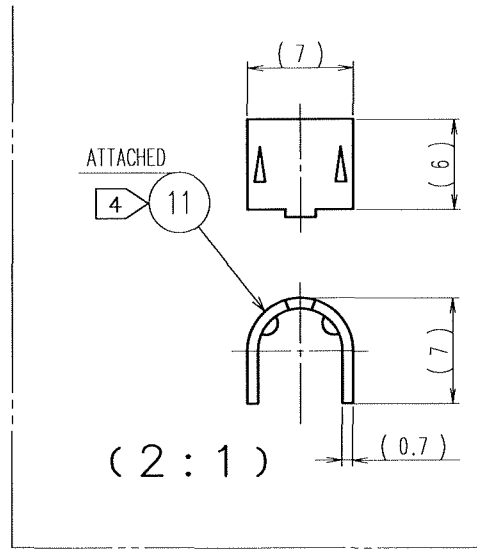

NOTE 1 THREAD PORTION OF REF. NO.① IS APPLIED WITH PRECOATING TO PREVENT LOOSENESS.
HOWEVER THE ADHESIVE EFFCTIVENESS IS DECREASED WHEN REUSED.
THEREFORE, TREAD PORTION IS RECOMMENDED TO COAT WITH LOCTITE 271 MANUFACTURED BY HENKEL JAPAN OR EQUIVALENT.
2 THE RECOMMENDED TIGHTENING TORQUE OF REF. NO.⑤ TO BE 1 N・m.
3 THE TIP OF REF. NO.⑩ SHALL BE FIXED TO THE CONCAVE PORTION WITH REF. NO.⑪ CLAMPED TO THE CABLE.
OPPOSITE SIDE DIMENSION OF A HEXAGON SOCKET OF REF. NO.⑩ IS 1.27mm.
AND THE RECOMMENDED TIGHTENING TORQUE OF REF. NO.⑩ TO BE 0.3 TO 0.4 N・m.
4 MANUAL CRIMPING TOOL OF REF. NO.⑪ : HR10A-TC- 02
(THE HOLE DIAMETER FOR CRIMPING : φ5.3)
5 ROTATION EXAMPLES OF REF. NO.① AND ⑧ ARE SHOWN.
6 OVER PLATING : GOLD 0.2μm min.
UNDER PLATING : NICKEL 2μm min.

NO.	MATERIAL	FINISH, REMARKS	NO.	MATERIAL	FINISH, REMARKS
6	BRASS	NICKEL PLATING			
5	BRASS	NICKEL PLATING	11	BRASS	
4	EPDM	(BLACK)	10	STEEL	NICKEL PLATING JIS B 1177 HEXAGON SOCKET SCREW M2.6×0.45×3
3	PHOSPHOR BRONZE	6	9	EPDM	(BLACK)
2	PPS	(BLACK) 94V-0	8	EPDM	(BLACK)
1	ZINC ALLOY	MATTE FINISH NICKEL PLATED	7	PHOSPHOR BRONZE	NICKEL PLATING

CODE NO.(OLD)	DRAWN	DESIGNED	CHECKED	APPROVED	RELEASED
CL	H.Kawashima '05・11・17	H.Kawashima '05・11・17	T.Okuyama '05・11・25	M.Sato 05.11.30	. .

SCALE 5 : 1
UNITS mm
DRAWING NO. EDC3-048670-72
HRS HIROSE ELECTRIC CO., LTD
PART NO. HR25-7TP-4P(72)
CODE NO. CL125-0001-8-72
1/1

TO
R

HRS DRAWING FOR REFERENCE