Oct.1.2018 Copyright 2018 HIROSE ELECTRIC CO., LTD. All Rights Reserved.
In case that the application demands a high level of reliability, such as automotive, please contact a company representative for further information.

HRS DRAWING FOR REFERENCE

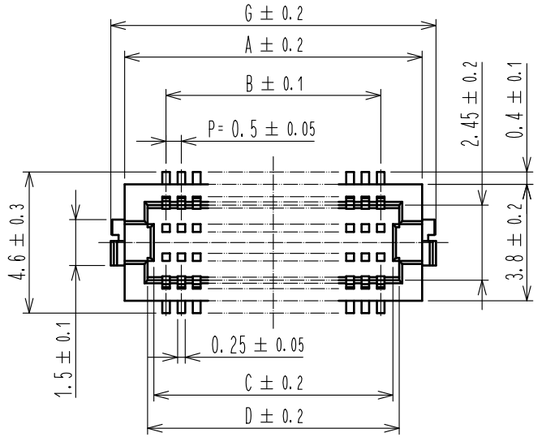

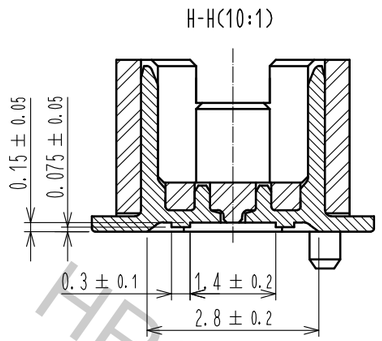

CODE No.	CONTACT	A	B	C	D	E	F	G
CL537-0028-7-86	20	7.2	4.5	5.3	5.7	6.6	5.3	8.1
CL537-0030-9-86	30	9.7	7.0	7.8	8.2	9.1	7.8	10.6
CL537-0031-1-86	36	11.2	8.5	9.3	9.7	10.6	9.3	12.1
CL537-0032-4-86	40	12.2	9.5	10.3	10.7	11.6	10.3	13.1
CL537-0034-0-86	50	14.7	12.0	12.8	13.2	14.1	12.8	15.6
CL537-0036-5-86	60	17.2	14.5	15.3	15.7	16.6	15.3	18.1

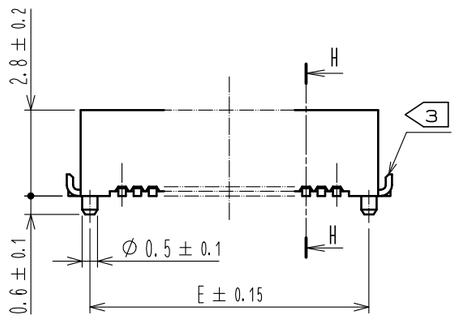

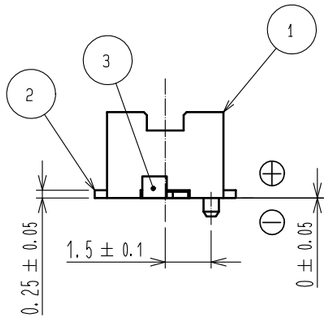

RECOMMENDED METAL MASK (10:1)

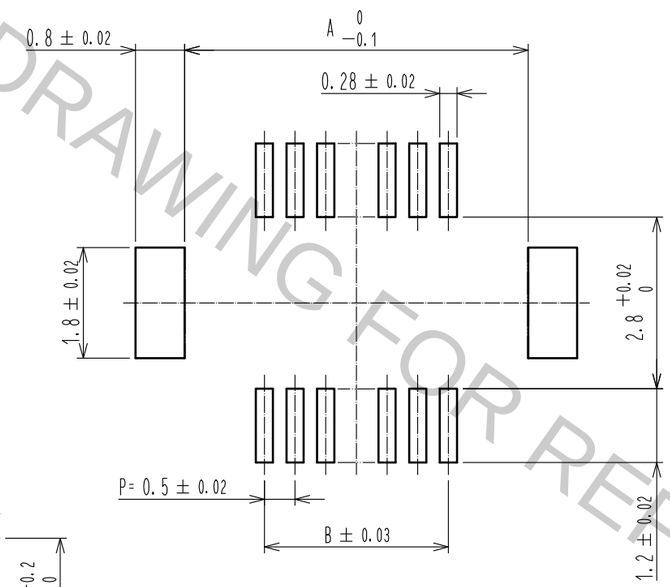

RECOMMENDED THICKNESS OF
METAL MASK : 120 μm

RECOMMENDED PATTERN (10:1)

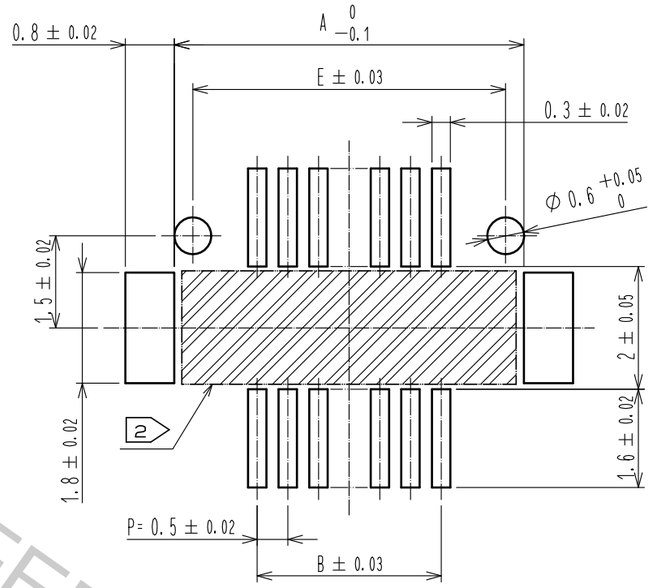

RECOMMENDED THICKNESS OF
SOLDER PASTE : 120 μm

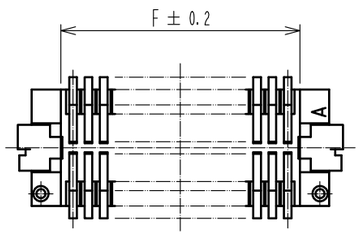

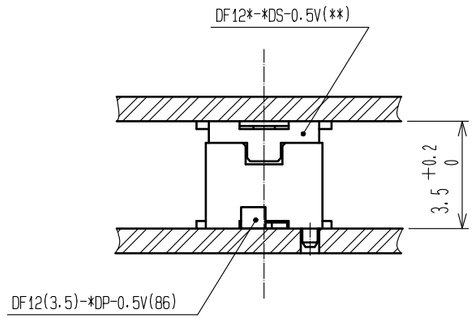

NOTES 1 : LEAD CO-PLANARITY INCLUDING REINFORCED METAL FITTINGS SHALL BE 0.08 mm MAX.
2 IF THERE IS PATTERN ON ▨ PART, THERE IS A POSSIBILITY THAT IT WILL MAKE CONTACT WITH THE LEADS.
3 REINFORCED METAL FITTINGS AS FOLLOWS.

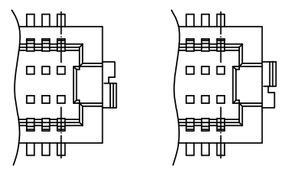

NO.	MATERIAL	FINISH , REMARKS
2	PHOSPHOR BRONZE	CONTACT AREA:GOLD PLATED 0.2μm min LEAD AREA:GOLD PLATED 0.015μm MIN OTHERS(UNDER PLATING):NICKEL PLATED 2μm min
1	POLYAMIDE	UL94V-0, NATURAL(BEIGE)

NO.	MATERIAL	FINISH , REMARKS
7	PS	CLEAR (REINFORCEMENT COLLAR)
6	PS	BLACK (PLASTIC REEL)
5	POLYESTER	CLEAR (COVER TAPE)
4	PS	CLEAR (EMBOSSED CARRIER TAPE)
3	BRASS	TIN PLATED 2μm MIN (UNDER PLATING):NICKEL 1μm MIN

UNITS	SCALE		COUNT	DESCRIPTION OF REVISIONS	DESIGNED	CHECKED	DATE
mm	5 : 1	1	1	DIS-H-00001707	SH. HOSODA	TS. MIYAZAKI	16.06.10

HIROSE ELECTRIC CO., LTD.

APPROVED	KH. IKEDA	12.11.06	DRAWING NO. EDC3-163509-77
CHECKED	YH. MICHIDA	12.11.06	PART NO. DF12(3.5)-*DP-0.5V(86)
DESIGNED	YN. SAKAMOTO	12.11.06	CODE NO. CL537
DRAWN	YN. SAKAMOTO	12.11.06	1/2

Oct.1.2018 Copyright 2018 HIROSE ELECTRIC CO., LTD. All Rights Reserved.
In case that the application demands a high level of reliability, such as automotive, please contact a company representative for further information.

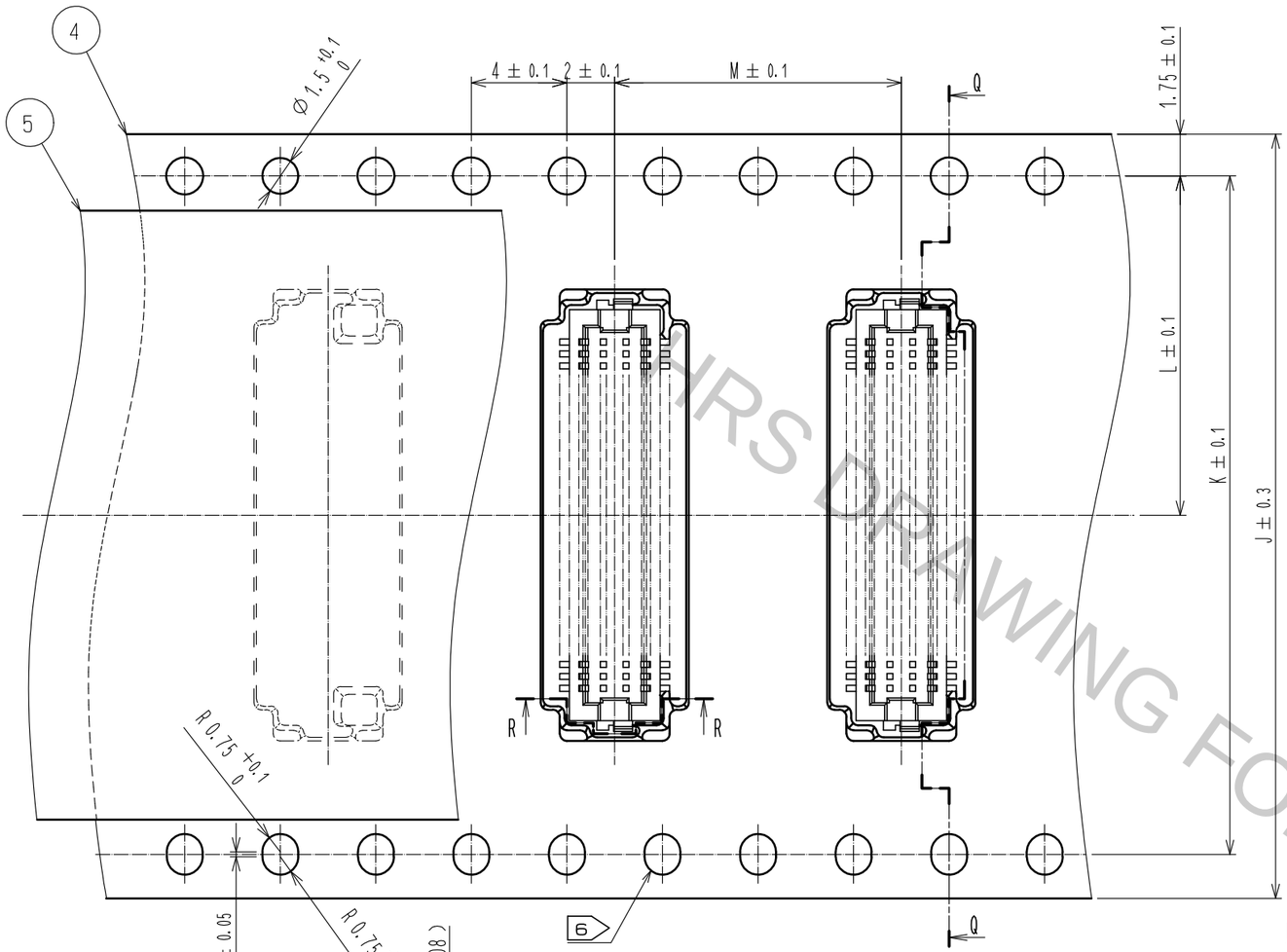

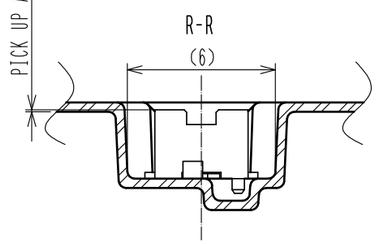

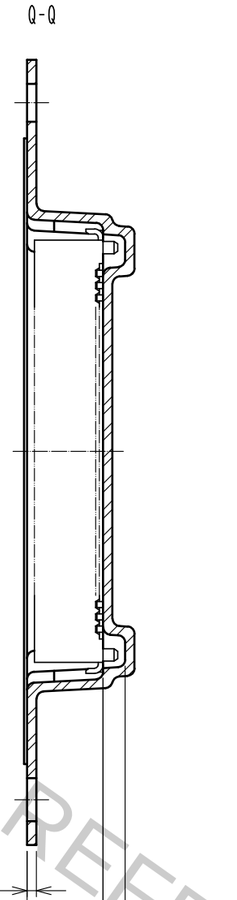

STYLE AND DIMENSION OF REEL (FREE)

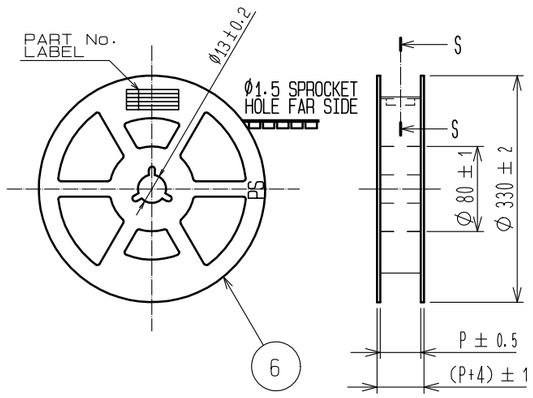

S-S(FREE)

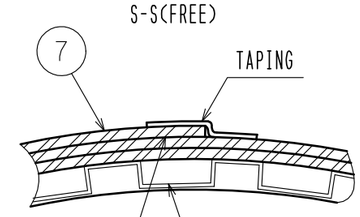

CODE No.	CONTACT	J	K	L	M	N	P
CL537-0028-7-86	20	16	–	7.5	12.0	0.38	17.5
CL537-0030-9-86	30	24	–	11.5	12.0	0.38	25.5
CL537-0031-1-86	36	24	–	11.5	8.0	0.30	25.5
CL537-0032-4-86	40	24	–	11.5	12.0	0.38	25.5
CL537-0034-0-86	50	24	–	11.5	8.0	0.30	25.5
CL537-0036-5-86	60	32	28.4	14.2	12.0	0.30	33.5

SUPPLIER
QUANTITY
PART No.
CODE No.
DATE OF MANUFACTURED

DETAIL OF PART No. LABEL

生産月日	年　月　日
図番	CL537-****-*-**
品名	DF12(3.5)-*DP-0.5V(86)
納入数量	1000Ko
納入者	ヒロセ電機(株)

NOTES 4 : 1 REEL 1000 CONNECTORS.
5 : AT THE BEGINNING OF THE REEL, 30 COMPONENTS SHALL BE EMPTY.
AT THE END OF THE REEL, 20 COMPONENTS SHALL BE EMPTY.
6 : WHEN THE TAPE WIDTH IS 32 mm, SPROCKET HOLES SHALL BE SET ON BOTH SIDES OF REEL AS SHOWN ON THIS DRAWING.
7 : PEEL FORCE REFERS TO JIS C 0806(IEC 60286-3).
8 : THE REEL IS PACKED WITH A POLYETHYLENE MATERIAL, TOGETHER WITH A DRYING AGENT.
9 : AFTER PACKING, ROLL 2 METERS OF THE REINFORCEMENT COLLAR TO OUTER CIRCUMFERENCE OF TAPE AND REEL POCKET, AND TAPE DOWN AT THE END THE COLLAR.

THIS DRAWING FOR REFERENCE

HRS

DRAWING NO.	EDC3-163509-77
PART NO.	DF12(3.5)-*DP-0.5V(86)
CODE NO.	CL537

1 2/2