	COUNT	DESCRIPTION OF REVISIONS	BY	CHKD	DATE		COUNT	DESCRIPTION OF REVISIONS	BY	CHKD	DATE
△					. .	△					. .
△						△					. .
△						△					. .

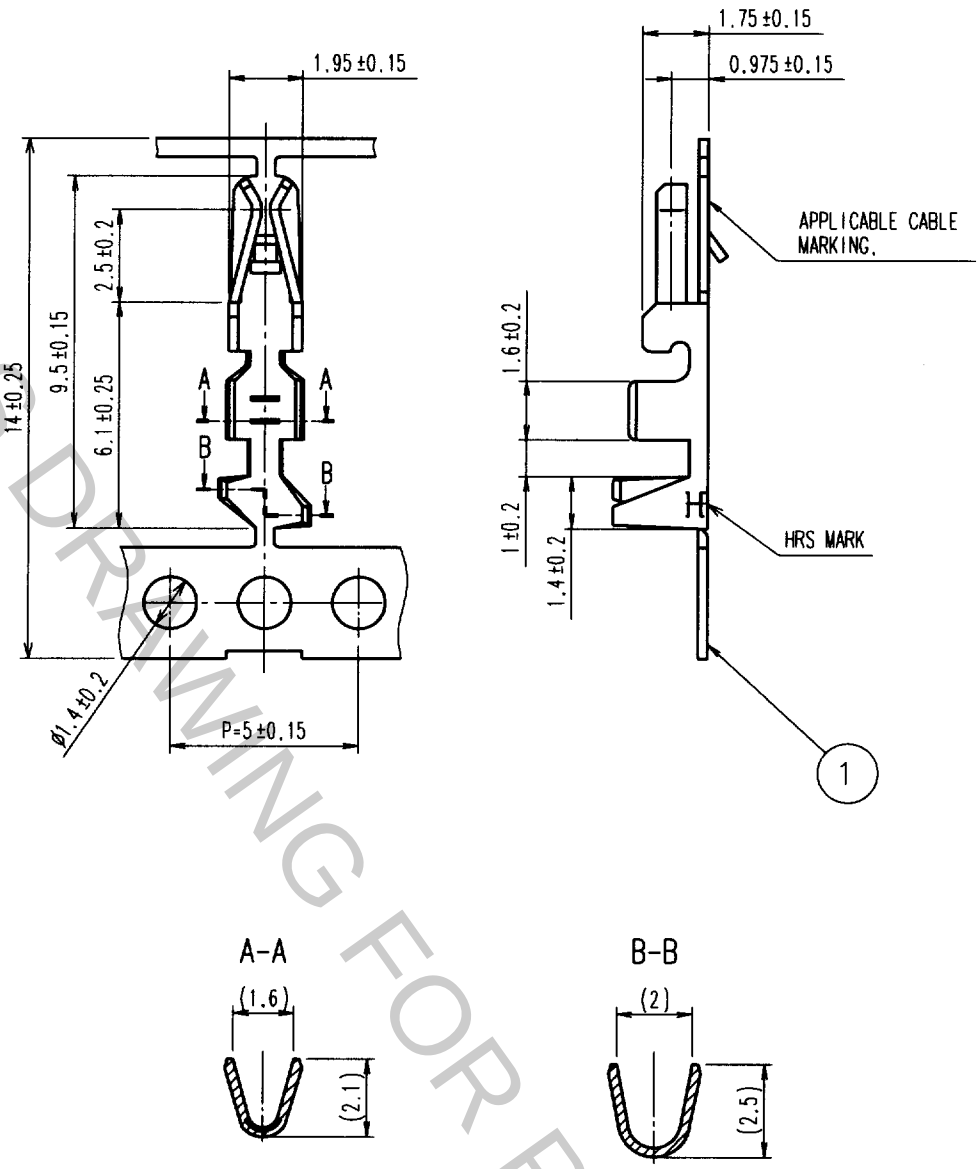

NOTES 1. APPLICABLE CABLE : AWG20 TO 22
2. 1 REEL : 10000 CONTACTS

NO.	MATERIAL	FINISH, REMARKS
1	PHOSPHOR BRONZE	TIN PLATED

CODE NO.(OLD)	DRAWN	DESIGNED	CHECKED	APPROVED	RELEASED
CL	J.Nakamura '01. 4. 16	Y. Inoue '01·4·20	T. Miyazaki '01·04·20	K. Katayose '01·4·23	

SACLE 5 : 1	DRAWING NO. EDC4-020460	PART NO. DF1B-2022SCF
UNITS mm	HRS HIROSE ELECTRIC CO.,LTD.	CODE NO. CL541-0223-1

1/1

FORM NO.228

TO

HRS DRAWING FOR REFERENCE

Oct.1.2018 Copyright 2018 HIROSE ELECTRIC CO., LTD. All Rights Reserved.
In case that the application demands a high level of reliability, such as automotive, please contact a company representative for further information.