Oct.1.2018 Copyright 2018 HIROSE ELECTRIC CO., LTD. All Rights Reserved.
In case that the application demands a high level of reliability, such as automotive, please contact a company representative for further information.

	COUNT	DESCRIPTION OF REVISIONS	BY	CHKD	DATE		COUNT	DESCRIPTION OF REVISIONS	BY	CHKD	DATE
1	11	RE-H-03895	T.A	C.H	'20.09.14						. .
					. .						. .
					. .						. .

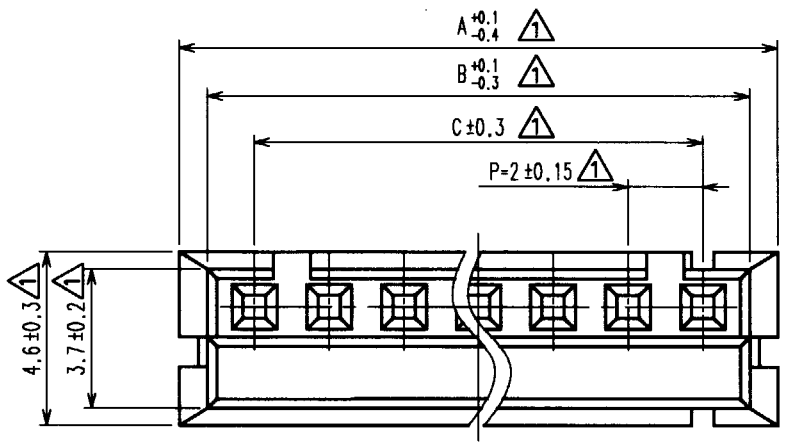

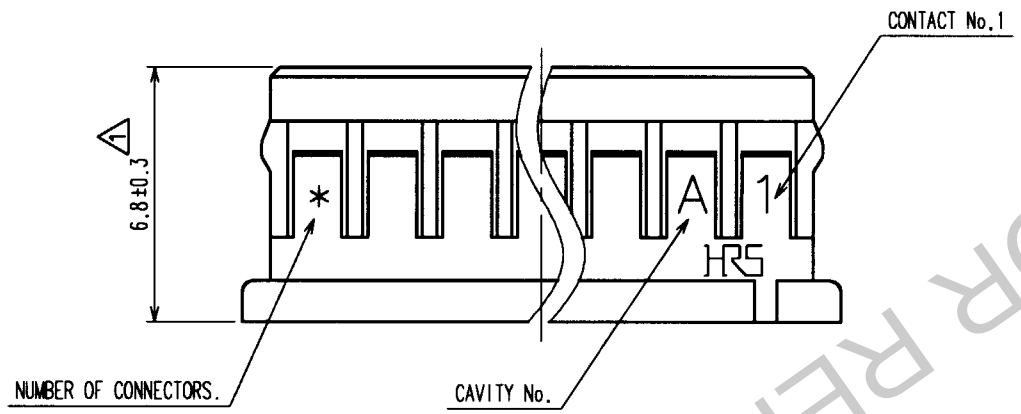

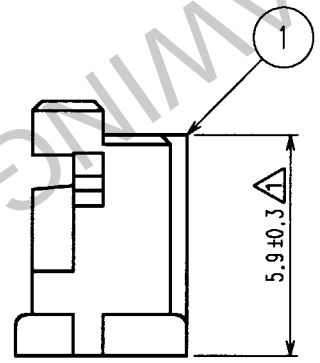

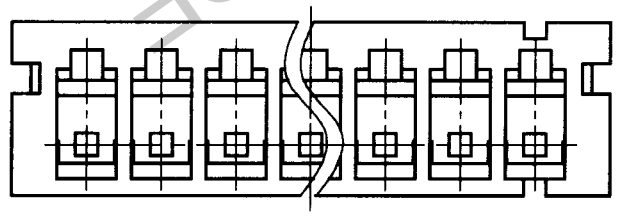

CODE No. 1	PART No.	NUMBER OF CONNECTORS	A	B	C
543-0003-8	DF3- 2S-2C	2	6	4.5	2
543-0004-0	DF3- 3S-2C	3	8	6.5	4
543-0005-3	DF3- 4S-2C	4	10	8.5	6
543-0006-6	DF3- 5S-2C	5	12	10.5	8
543-0007-9	DF3- 6S-2C	6	14	12.5	10
543-0008-1	DF3- 7S-2C	7	16	14.5	12
543-0009-4	DF3- 8S-2C	8	18	16.5	14
543-0010-3	DF3- 9S-2C	9	20	18.5	16
543-0011-6	DF3-10S-2C	10	22	20.5	18
543-0012-9	DF3-11S-2C	11	24	22.5	20
543-0013-1	DF3-12S-2C	12	26	24.5	22
543-0014-4	DF3-13S-2C	13	28	26.5	24
543-0015-7	DF3-14S-2C	14	30	28.5	26
543-0016-0	DF3-15S-2C	15	32	30.5	28

Note 1:The minimum ordering quantity is one package(containing 100 pieces).
1 2:(NOTE DELETED)
1 3:(NOTE DELETED)

UNCONTROLLED DRAWING FOR REFERENCE

NO.	MATERIAL	FINISH, REMARKS	NO.	MATERIAL	FINISH, REMARKS
			1	POLYAMIDE	BLACK, UL94V-0

CODE NO.(OLD)	DRAWN	DESIGNED	CHECKED	APPROVED	RELEASED
	K.TANAKA	K.TANAKA	T.YAMAGUCHI	M.YAMAMOTO	
	'88.03.28	'88.03.28	'88.03.29	'88.03.29	. .

SCALE 5 : 1
UNITS mm

DRAWING NO. EDC3-162387-01

HRS HIROSE ELECTRIC CO., LTD

PART NO. DF3-*S-2C

CODE NO. CL543

1/1

TO