Oct.1.2018 Copyright 2018 HIROSE ELECTRIC CO., LTD. All Rights Reserved.
In case that the application demands a high level of reliability, such as automotive,
please contact a company representative for further information.

HRS DRAWING FOR REFERENCE

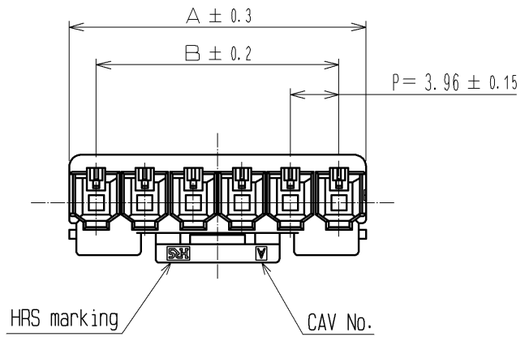

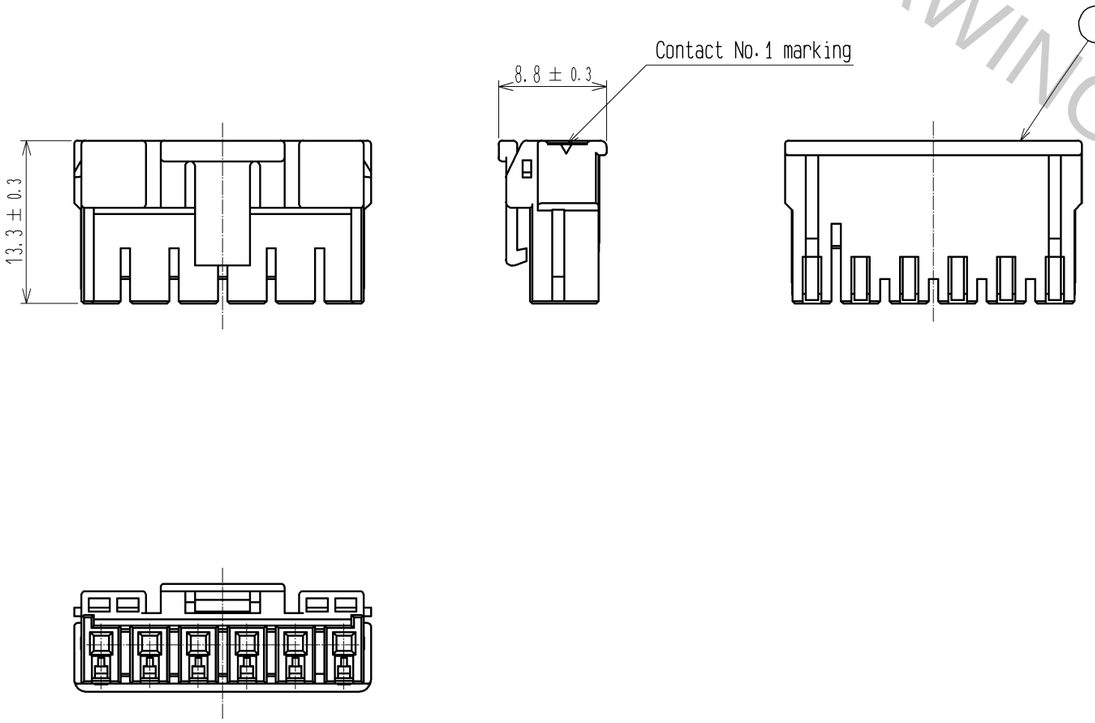

Mating Figure

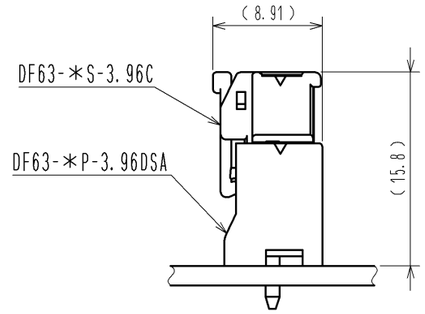

Part Number	HRS No.	Number of Contact	A	B
DF63-1S-3.96C	680-0508-2	1	6.2	—
DF63-2S-3.96C	680-0509-5	2	8.36	3.96
DF63-3S-3.96C	680-0502-6	3	12.32	7.92
DF63-4S-3.96C	680-0510-4	4	16.28	11.88
DF63-5S-3.96C	680-0511-7	5	20.24	15.84
DF63-6S-3.96C	680-0512-0	6	24.2	19.8

NOTE. 1. Per pack:100 Pieces.
2. The dimensions in parenthesis are for reference.

NO.	MATERIAL	FINISH , REMARKS
1	PBT	UL94V-0(BLACK)

UNITS	SCALE	COUNT	DESCRIPTION OF REVISIONS	DESIGNED	CHECKED	DATE
mm	2 : 1	△				

HIROSE ELECTRIC CO., LTD.

APPROVED	KI. AKIYAMA	13. 09. 10
CHECKED	OM. MIYAMOTO	13. 09. 10
DESIGNED	TO. HORII	13. 09. 09
DRAWN	TO. HORII	13. 09. 09

DRAWING NO.	EDC3-354067-00
PART NO.	DF63-*S-3.96C
CODE NO.	△ 1/1