Oct.1.2018 Copyright 2018 HIROSE ELECTRIC CO., LTD. All Rights Reserved.
In case that the application demands a high level of reliability, such as automotive,
please contact a company representative for further information.

COUNT	DESCRIPTION OF REVISIONS	BY	CHKD	DATE	COUNT	DESCRIPTION OF REVISIONS	BY	CHKD	DATE
△				. .	△				. .
△				. .	△				. .
△				. .	△				. .

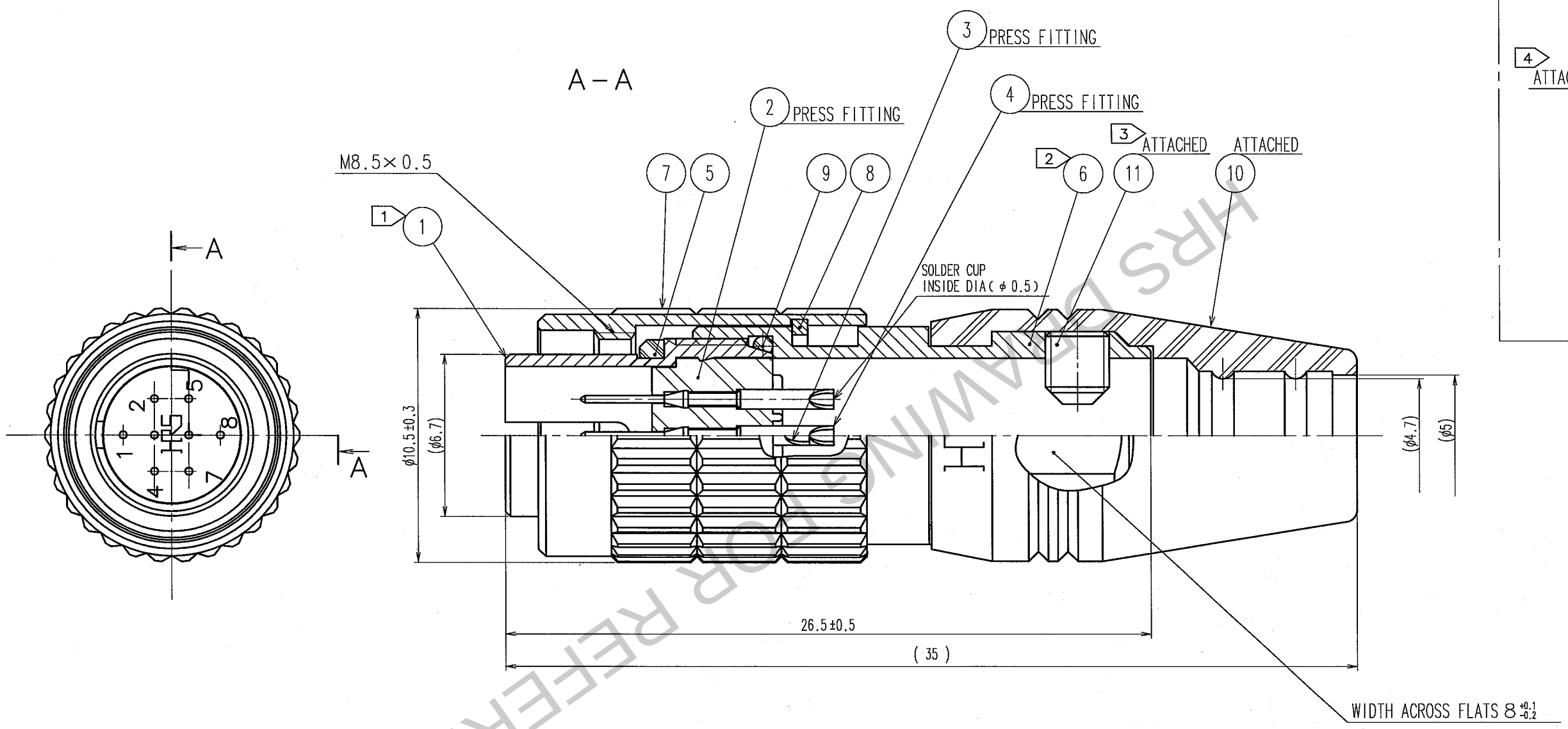

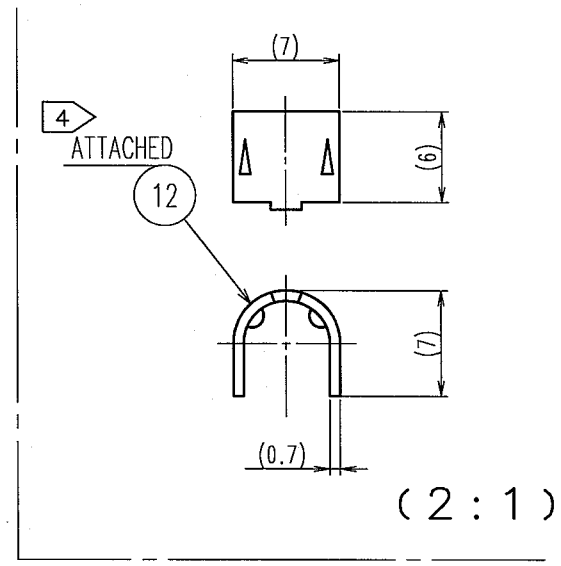

NOTE 1 THREAD PORTION OF REF.NO. 1 IS APPLIED WITH PRECOATING TO PREVENT LOOSENESS.
HOWEVER, THE ADHESIVE EFFECTIVENESS IS DECREASED WHEN REUSED.
THEREFORE, TREAD PORTION IS RECOMMENDED TO COAT WITH LOCTITE 271
MANUFACTURED BY HENKEL JAPAN OR EQUIVALENT.

2 THE RECOMMENDED TIGHTENING TORQUE OF REF NO. 6 TO BE 1 N・m.

3 THE TIP OF REF.NO. 11 SHALL BE FIXED TO THE CONCAVE PORTION WITH
REF.NO. 12 CLAMPED TO THE CABLE.
OPPOSITE SIDE DIMENSION OF A HEXAGON SOCKET OF REF.NO. 11 IS 1.27mm.
AND THE RECOMMENDED TIGHTENING TORQUE OF REF.NO. 11 TO BE 0.3 TO 0.4 N・m.

4 MANUAL CRIMPING TOOL OF REF.NO. 12 : HR10A-TC-02(THE HOLE DIAMETER FOR
CRIMPING : φ5.3)

5 ROTATION EXAMPLES OF REF.NO. 1 AND 6 ARE SHOWN.

6 OVER PLATING : GOLD 0.2μm min.
UNDER PLATING : NICKEL 2μm min.

NO.	MATERIAL	FINISH, REMARKS	NO.	MATERIAL	FINISH, REMARKS
6	BRASS	NICKEL PLATING	12	BRASS	
5	EPDM	(BLACK)	11	STEEL	NICKEL PLATING M2.6×0.45×3
4	PHOSPHOR BRONZE	6	10	EPDM	(BLACK)
3	PHOSPHOR BRONZE	6	9	EPDM	(BLACK)
2	PPS	(BLACK) UL94V-0	8	PHOSPHOR BRONZE	NICKEL PLATING
1	ZINC ALLOY	MATTE FINISH NICKEL PLATING	7	BRASS	NICKEL PLATING

CODE NO.(OLD)	DRAWN	DESIGNED	CHECKED	APPROVED	RELEASED
CL	H.Kawashima '05.11.5	H.Kawashima '05.11.5	T.Akiyama '05.11.05	M.Sato 05.11.05	. .

SCALE 5 : 1	DRAWING NO. EDC3-047695-72	PART NO. HR25-7TP-8P(72)
UNITS mm	HRS HIROSE ELECTRIC CO., LTD	CODE NO. CL125-0005-9-72 1/1

TO
R

HRS DRAWING FOR REFERENCE