TOLERANCE UNLESS OTHERWISE SPECIFIED	
.X	±0.35
.XX	±0.25
.XXX	±0.15

THIS IS A C.A.D. GENERATED DRAWING
DO NOT MAKE MANUAL REVISIONS TO MASTER.

ISSUE NUMBER	
ORIGINAL	1

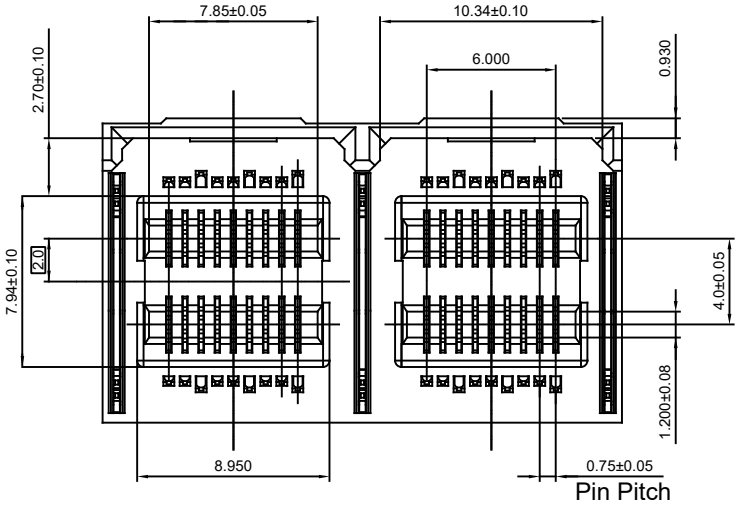

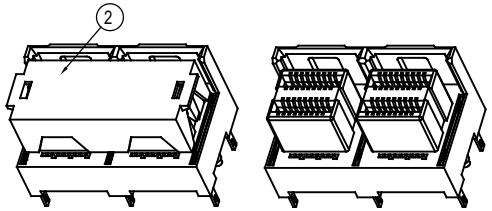

NOTES:

MATERIAL:

HOUSING:	L.C.P GLASS REINFORCED, UL-94V-0
CAP:	L.C.P GLASS REINFORCED, UL-94V-0, COLOR: BLACK
INSERT MOLDING:	L.C.P GLASS REINFORCED, UL-94V-0
LATCH:	STAINLESS STEEL, TIN (MATTE) 100~200"μ
CONTACT:	COPPER ALLOY 30 μ" GOLD PLATING ON CONTACT AREA MATTE TIN PLATING ON SOLDER TAIL OVER NICKEL UNDER PLATING

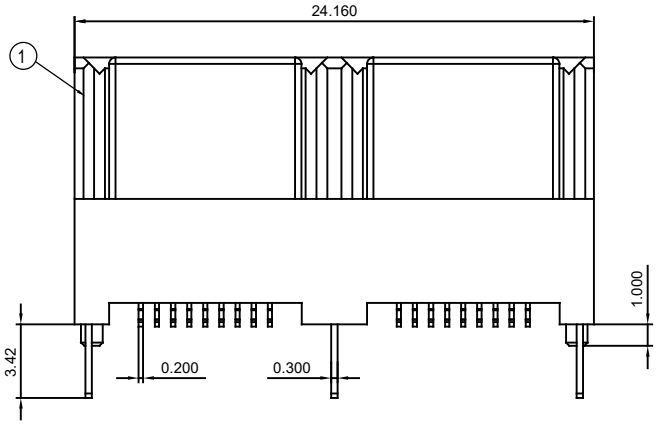

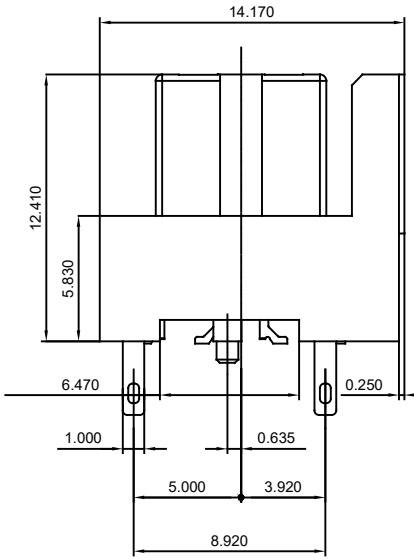

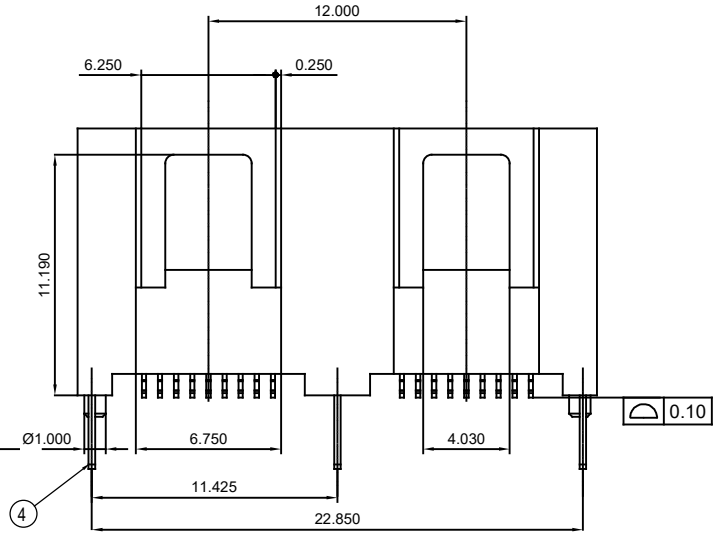

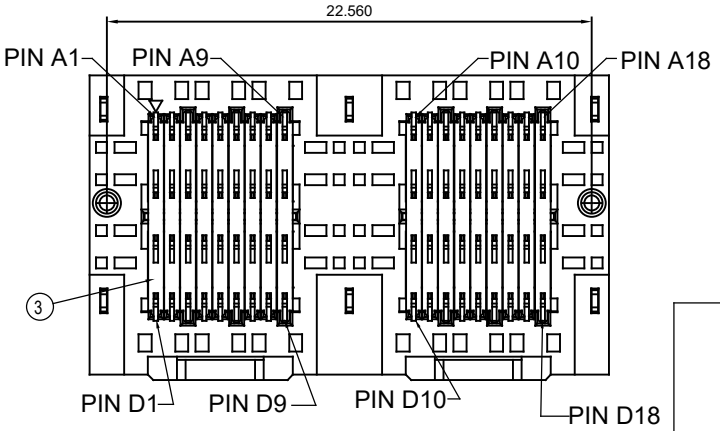

NO.	DESCRIPTION	QTY.	MATERIAL	FINISH/COLOR
4	LATCH	2	STAINLESS STEEL	TIN(MATTE)100~200 μ"
3	CONTACT	36	COPPER ALLOY	SEE NOTES
3	INSERT MOLDING	9	L.C.P GLASS REINFORCED, UL94 V-0	SEE NOTES
2	CAP	1	L.C.P GLASS REINFORCED, UL94 V-0	BLACK
1	HOUSING	1	L.C.P GLASS REINFORCED, UL94 V-0	SEE NOTES

MINI SAS HD EXTERNAL, VERTICAL SMT, FEMALE, 72 CONTACTS

ACAD REFERENCE NO.:	901-072-629-002		
DRAWN: W.T		DATE: JUNE.28 /2018	
CHECKED:		DATE:	
SCALE: N.T.S		SHEET 1 OF 1	
DRAWING NUMBER:	901-072-629-002		ISSUE
PART NUMBER:	901-072-629-002		1

RoHS COMPLIANT

THIS SERIES FULLY CONFORMS TO THE EUROPEAN UNION DIRECTIVES 2011/65/EU FOR RoHS COMPLIANCY.

EDAC INC
TORONTO, ONTARIO
CANADA
YOUR CONNECTION TO QUALITY & SERVICE

THESE DRAWINGS AND SPECIFICATIONS ARE THE PROPERTY OF EDAC INC.,AND SHALL NOT BE REPRODUCED,OR COPIED OR USED AS THE BASIS FOR THE MANUFACTURE OR SALE OF APPARATUS WITHOUT WRITTEN PERMISSION.