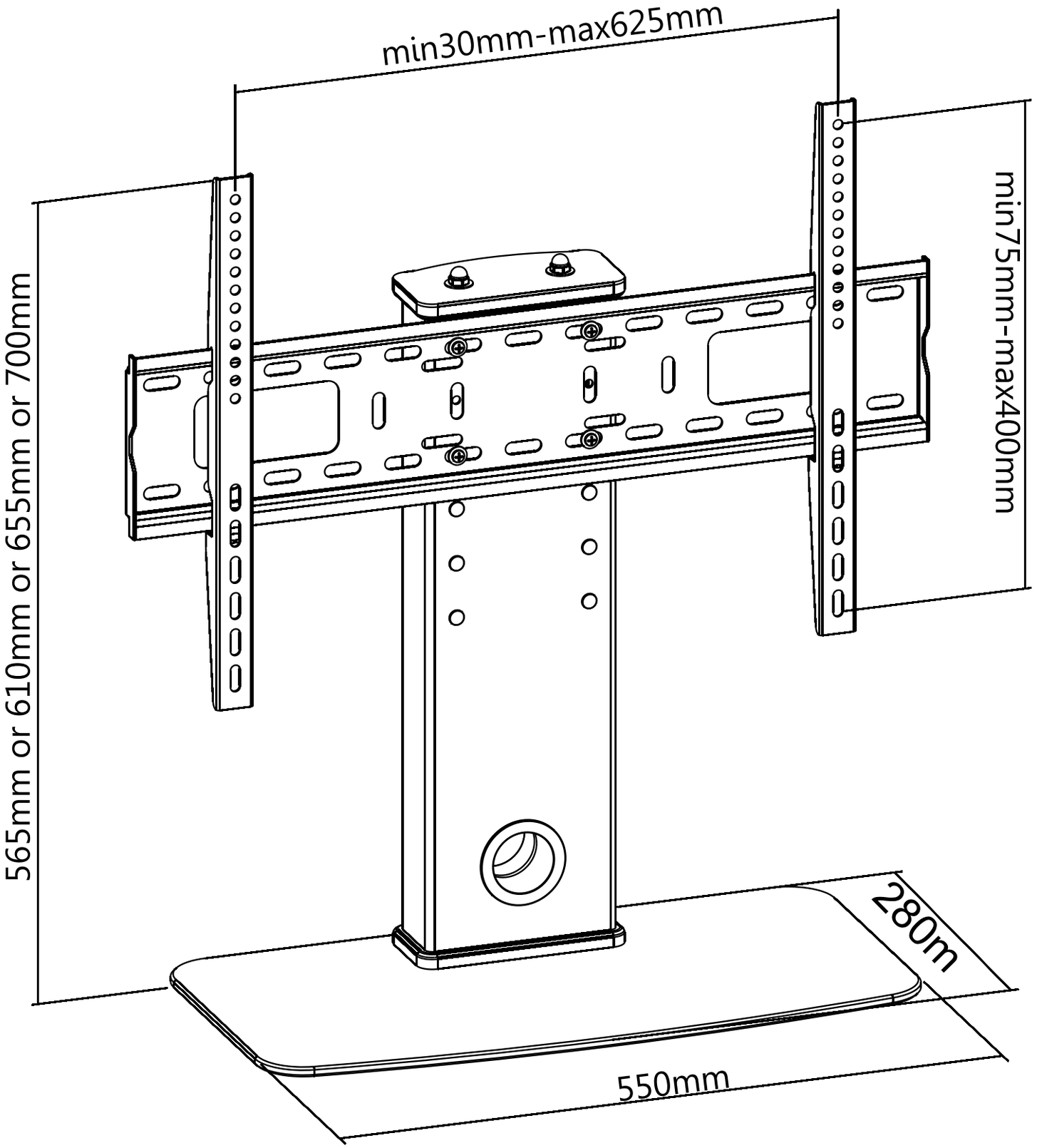
min30mm-max625mm
min75mm-max400mm
565mm or 610mm or 655mm or 700mm
280m
550mm