THIS DRAWING IS UNPUBLISHED. RELEASED FOR PUBLICATION -.- .
© COPYRIGHT – TE Connectivity ALL RIGHTS RESERVED.

REVISIONS

P	LTR	DESCRIPTION	DATE	DWN	APVD
	A	GO TO PRODUCTION STATUS	14JAN2019	PH	AC

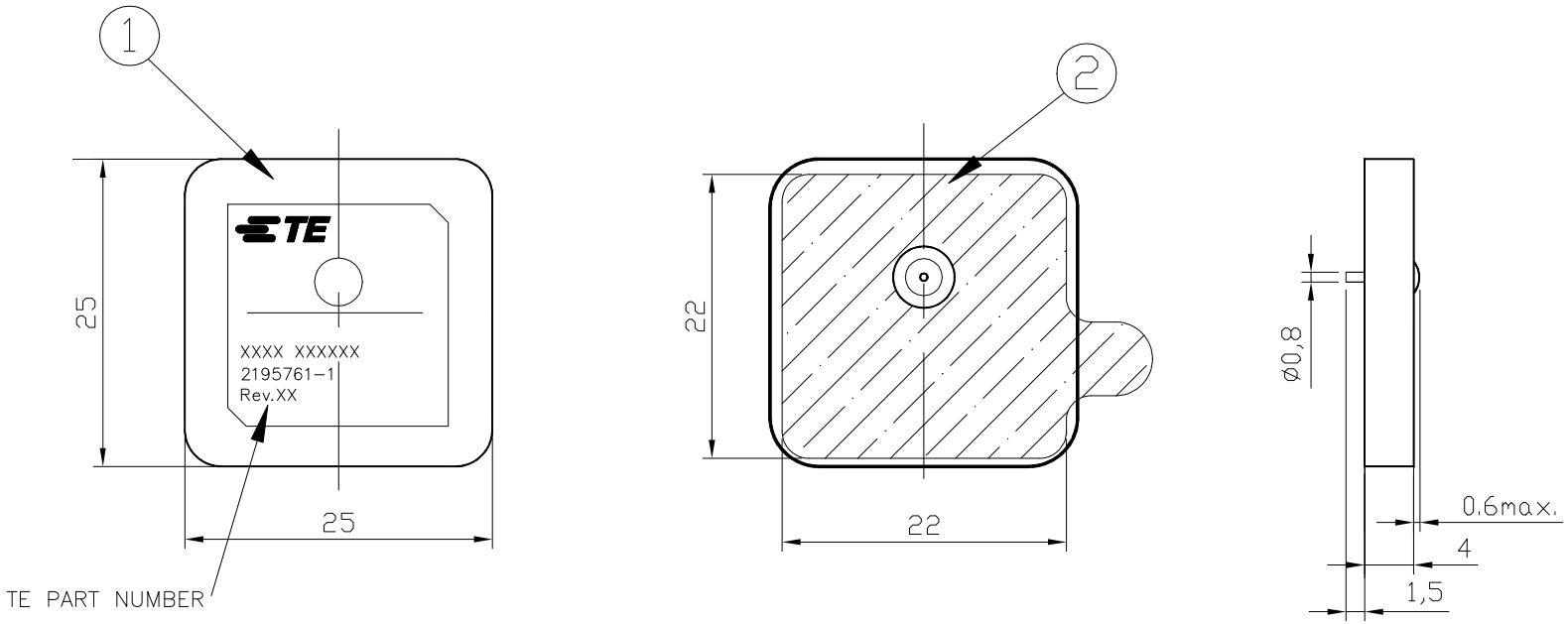

NO.	ITEM	SPECIFICATION	QT'Y
2	TAPE	TWIN ADHESIVE	1
1	CERAMIC	SIZE: 25*25*4mm	1

TE PN	2195761-1

NOTES:

1. MATERIALS : REFER TO TABLE.
2. A: ALL MATERIALS, COMPONENTS AND PROCESSES SHALL COMPLY WITH TEC-138-702 (CONTAINS NO BANNED OR RESTRICTED SUBSTANCES)
   B: NO REACH SVHC SHALL BE CONTAINED ABOVE THE THRESHOLD AS DEFINED IN REACH SVHC
   C: LOW HALOGEN: CODE 2(Br<900PPM, Cl<900PPM, Br+Cl<1500PPM PER HOMOGENEOUS MATERIAL) COMPLIANCE DEFINITION IN ANNEX A OF TEC-138-702
3. CONTACT TE CONNECTIVITY ENGINEERING PRIOR TO DESIGNING INTO AN APPLICATION

THIS DRAWING IS A CONTROLLED DOCUMENT.

DIMENSIONS: mm

TOLERANCES UNLESS OTHERWISE SPECIFIED:
0 PLC ± –
1 PLC ± –
2 PLC ± –
3 PLC ± –
4 PLC ± –
ANGLES ± –

MATERIAL –
FINISH –

DWN PAUL HUANG 20DEC2018
CHK AMOS CHEAH 20DEC2018
APVD AMOS CHEAH 20DEC2018
PRODUCT SPEC –
APPLICATION SPEC –
WEIGHT –

TE Connectivity

NAME GNSS_25x25

SIZE	CAGE CODE	DRAWING NO	RESTRICTED TO
A2	00779	C-2195761	–

CUSTOMER DRAWING | SCALE 1:1 | SHEET 1 OF 1 | REV A

1471-9 (1/15)