SERPAC Electronic Enclosures

BW27AYYASZZ

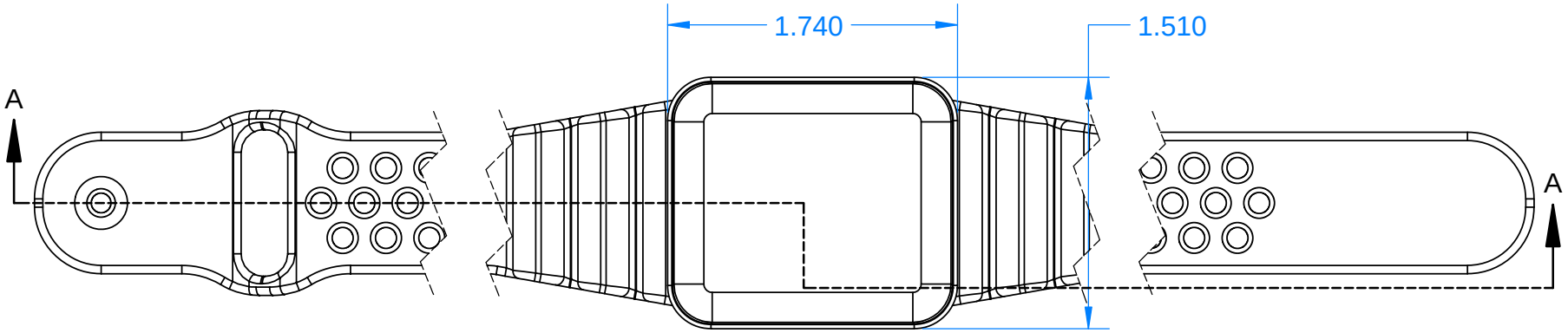

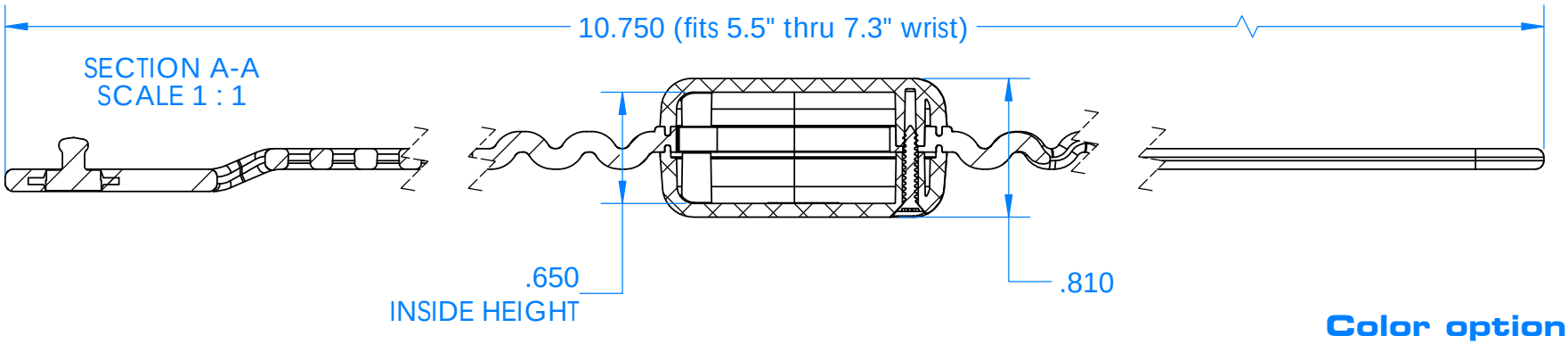

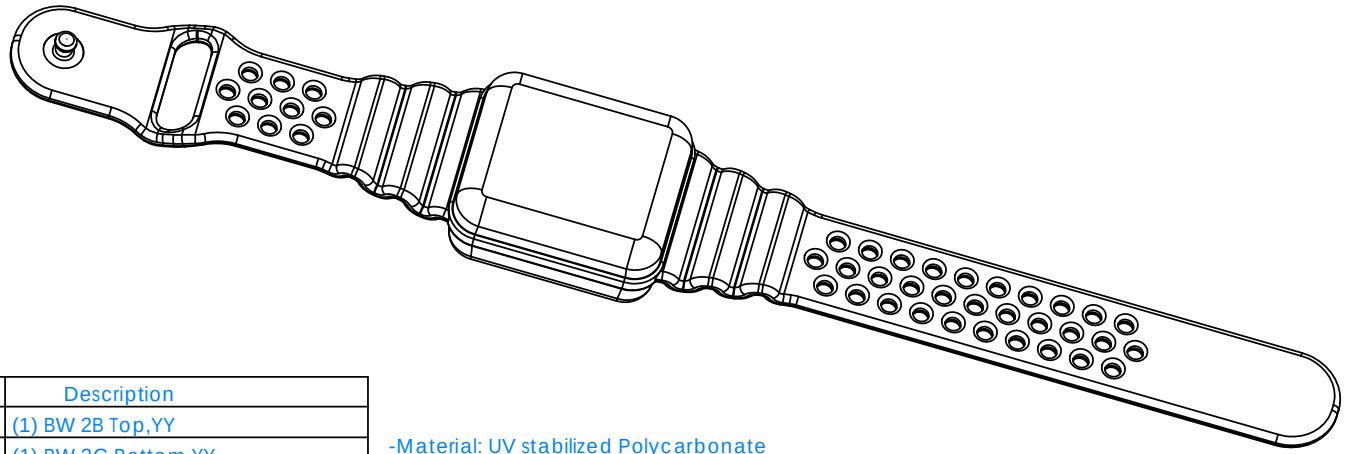

Color options:

YY (Enclosure Color)

BK=Black

ZZ (Strap Color)

BK=Black
GM=GunMetal
YL=Yellow
OR=Orange
NO=NeonOrange
NG=NeonGreen
BL=Blue

PN	Description
5512A,YY	(1) BW 2B Top,YY
5515A,YY	(1) BW 2C Bottom,YY
5517A,ZZ	(1) BW 2tS-Small Comolded Strap,ZZ
6008	(4) #2 X 9/16" PH HD screw

-Material: UV stabilized Polycarbonate
Flammability UL 94 V-0
-Watertight enclosure meets or exceed Nema 4 and or IP67.

ALL DIMENSIONS ARE ± .010" 7/23/2019

2009 Wright Ave. La Verne, CA 91750
Ph. (626) 331-0517 Fx. (626) 331-8584 serpac.com

SERPAC Electronic Enclosures

BW27AYYASZZ

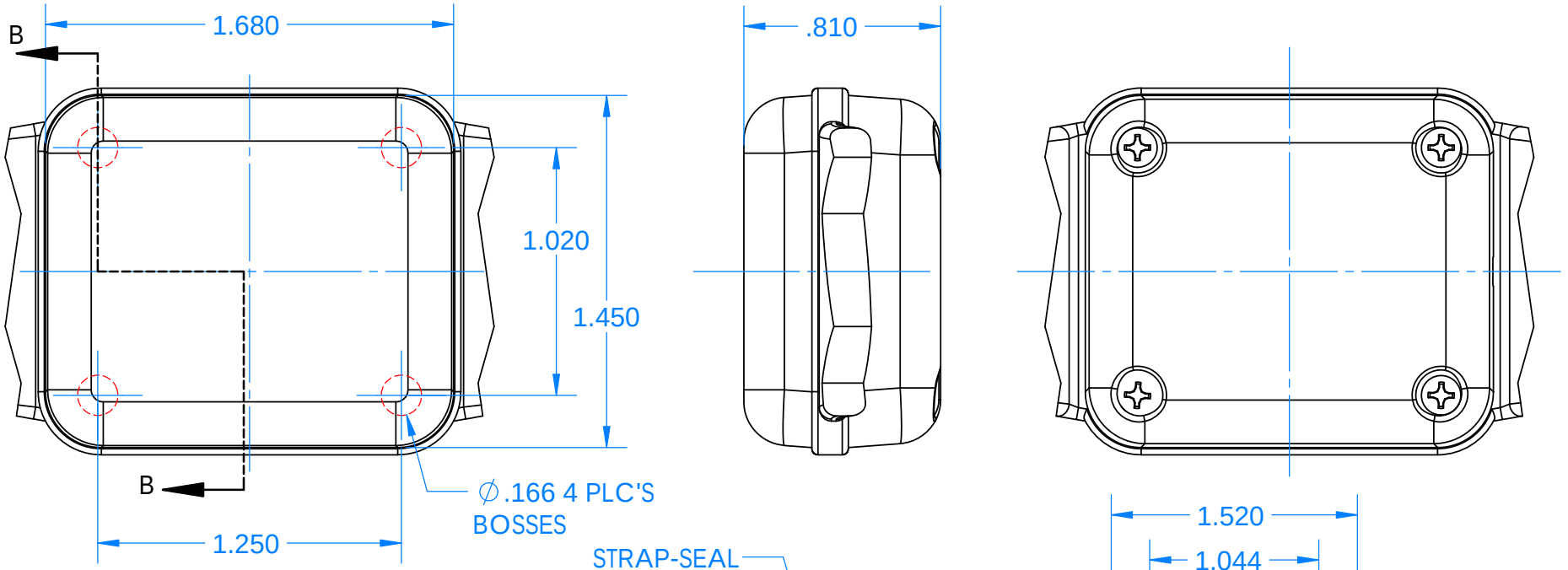

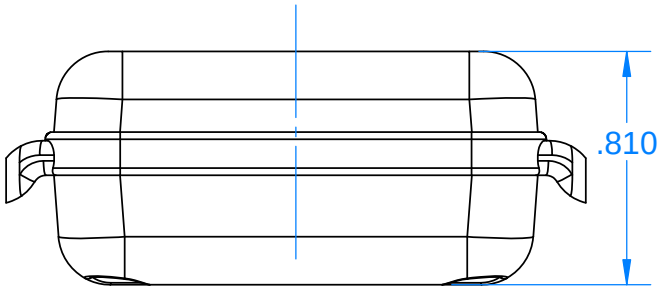

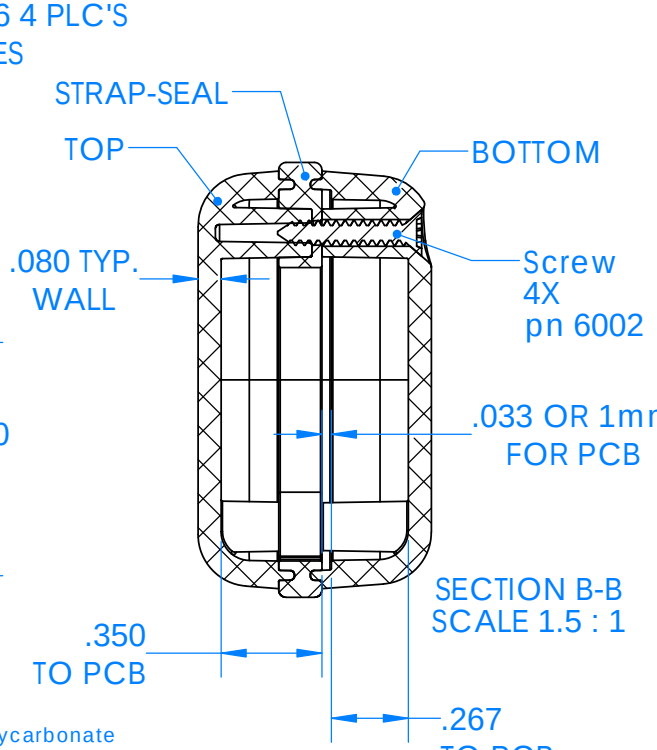

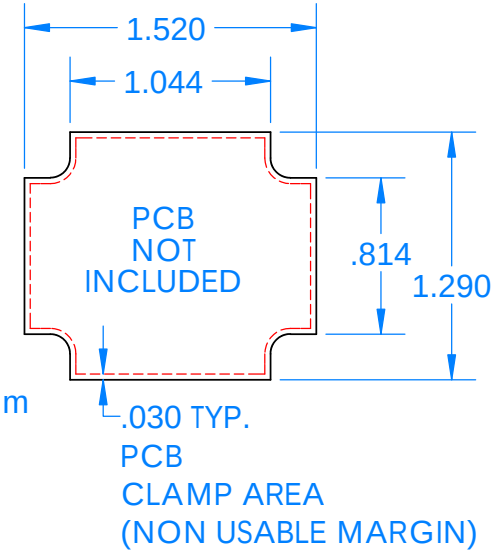

PN	Description
5512A,YY	(1) BW 2B Top,YY
5515A,YY	(1) BW 2C Bottom,YY
5517A,ZZ	(1) BW 2tS-Small Comolded Strap,ZZ
6008	(4) #2 X 9/16" PH HD screw

-Material: UV stabilized Polycarbonate
Flammability UL 94 V-0
-Watertight enclosure meets or
exceed Nema 4 and or IP67.

Refere to page 1 for:
YY (Enclosure color options)
ZZ (Strap color options)

ALL DIMENSIONS ARE ± .010" *7/23/2019*

2009 Wright Ave. La Verne, CA 91750
Ph. (626) 331-0517 Fx. (626) 331-8584 serpac.com