sales@trfastenings.com
www.trfastenings.com

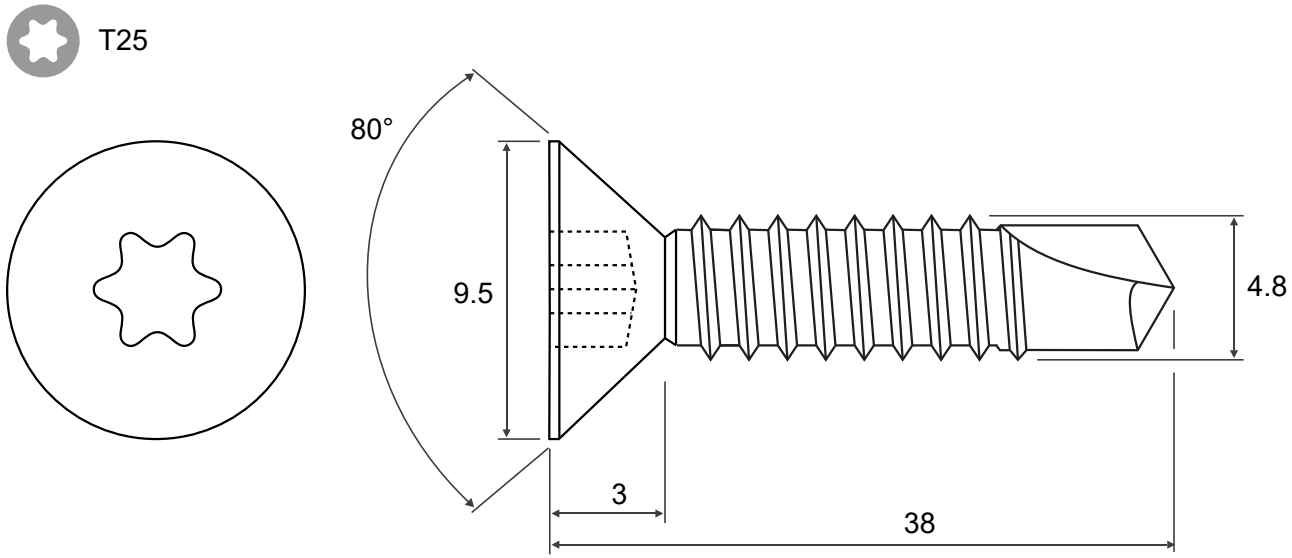

4.8mm x 38mm Countersunk Head Recess T Drive Self Drilling Screw DIN 7504P	Material	Steel	Customer Part No.	4.8 X 38 KTSTDX Z100 DIN7504
	Finish	Zinc & Clear Cr3 De-embrittled	Web Ref No	TR00011962-103

© TR FASTENINGS LTD. 2020 THIS DRAWING IS THE PROPERTY OF TR FASTENINGS AND IS SUPPLIED IN CONFIDENCE, AND MAY NOT WHOLLY OR PARTIALLY BE COPIED, WITHOUT THE EXPRESSED AUTHORISATION OF TR FASTENINGS LTD.

UNCONTROLLED COPY

UNLESS OTHERWISE SPECIFIED : DIMENSIONS ARE IN MILLIMETERS