REV	DESCRIPTION	DATE	APPROVED
1	INITIAL ISSUE	061100	CDD
2	MATL. SPEC. CHANGE	20/12/01	CN10

RICHCO ADDED RMS NO. 04/08/09

3rd ANG PROJECTION

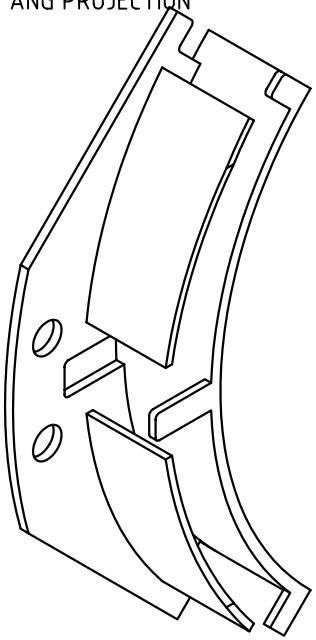

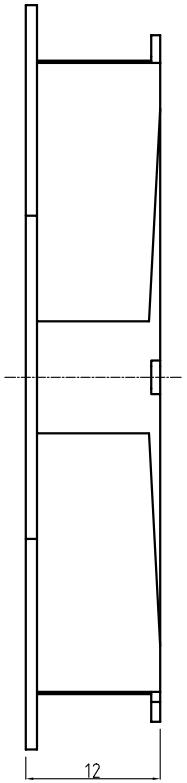

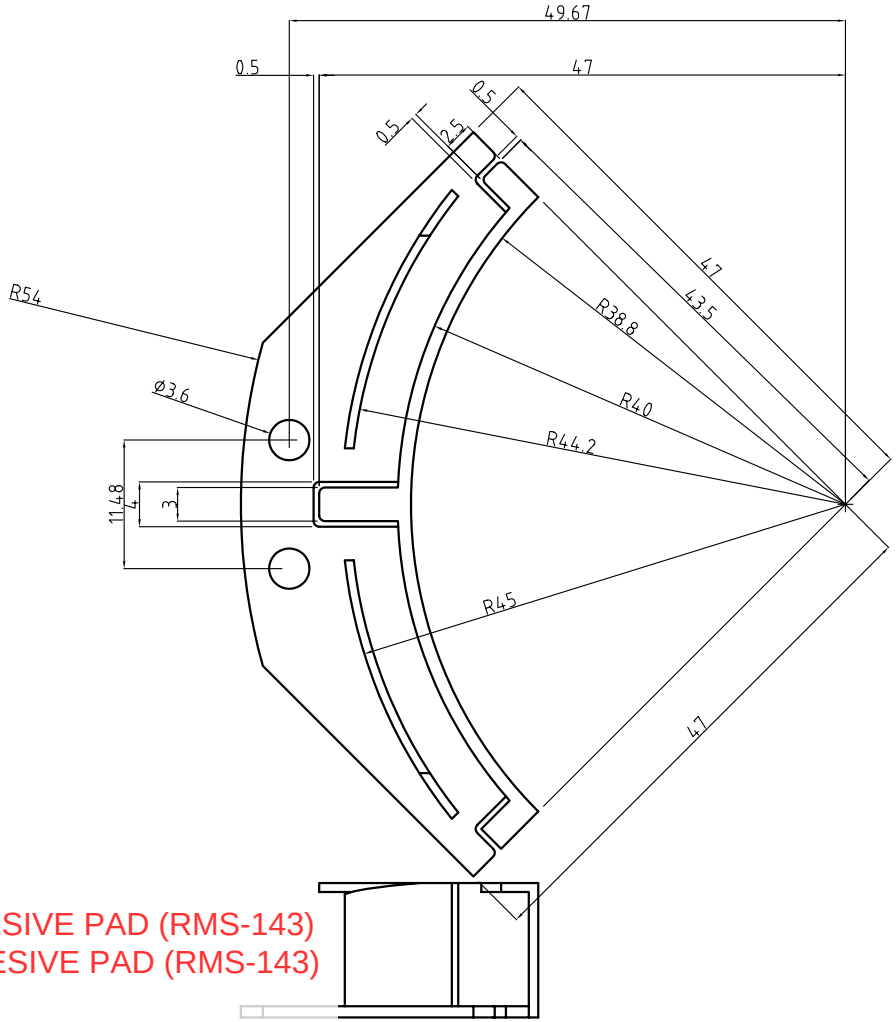

EFA04 34 P06 = EFA04 34 006 (RMS-390) WITH ADHESIVE PAD (RMS-143)
EFA04 34 PR6 = EFA04 34 006 (RMS-390) WITH ADHESIVE PAD (RMS-143) AND RICHCO RIVET (RMS-56)
EFA04 34 R06 = EFA04 34 006 (RMS-390) WITH RICHCO RIVET (RMS-56)

NOTES: F.R. NYLON 6 RADIFLAM SAE100 OR EQUIVLANT

ALL DIMS IN MM UNLESS STATED

GEN TOLS
0 =+/-0.5
0.0 = +/-0.3
0.00 = +/-0.1

EUROPLUS FIBRE OPTICS
Europlus House, Thompson Drive, Anglia International Airpark, Rendlesham, Suffolk, IP12 2RQ. Tel: (01394) 445100 Fax: (01394) 445109

MATERIAL SEE NOTES	THIS DOCUMENT CONTAINS PROPRIETRY INFORMATION WHICH SHALL NOT BE REPRODUCED, TRANSFERED TO OTHER DOCUMENTS, DISCLOSED TO OTHERS USED FOR MANUFACTURING OR ANY OTHER PURPOSE WITHOUT THE WRITTEN AUTHORISATION OF EUROPLUS FIBRE OPTICS Ltd.	DESCRIPTION	DRAWN CDD	DATE 061100	SIZE	FILE NAME	DWG. No	REV.
FINISH Flash Free		40mm rad corner guide 12mm high	CHKD CDD	DATE 061100		0434006_3d	EFA04 34 006	2
ICE No:			DO NOT SCALE DRAWING		SCALE 2:1		SHEET 1 of 1	