CUSTOMER DRAWING

REVISION		
REV.	DESCRIPTION	DATE
PA1	INITIAL RELEASE	2019/5/29

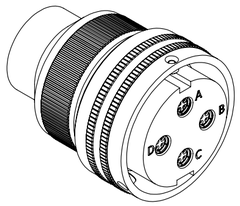

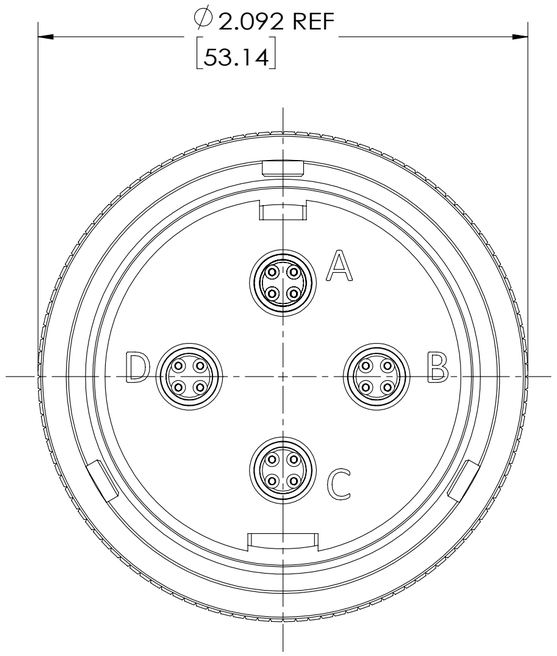

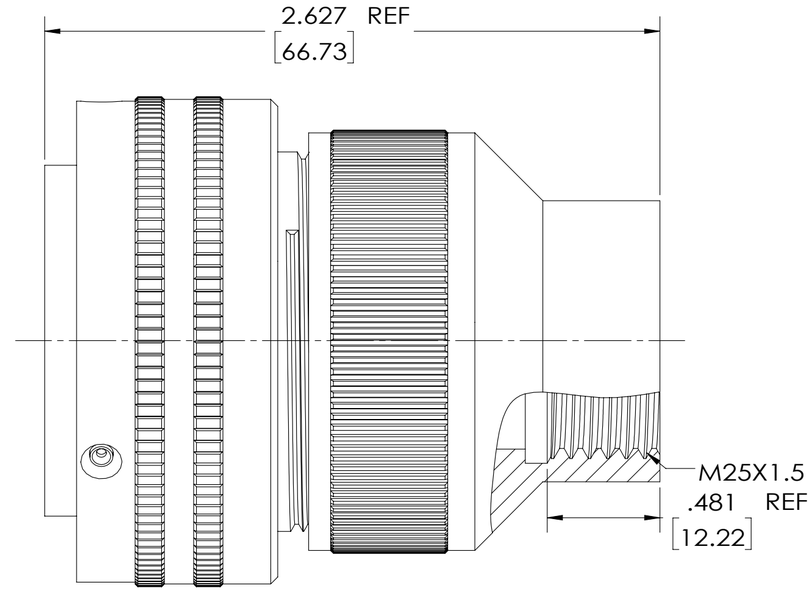

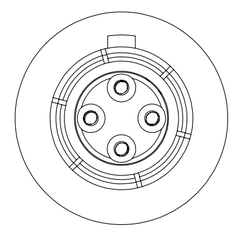

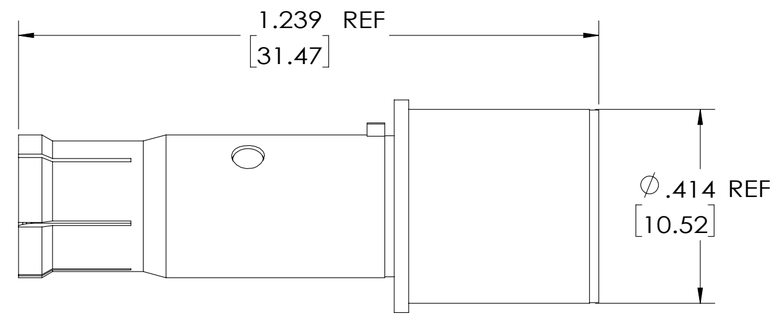

QUADRAX CONTACT
GOLD PLATED
SCALE 4.000

SPECIFICATIONS

CURRENT RATE	5Amps
OPERATING VOLTAGE	37.5V DC
OPERATING TEMPERATURE	-55°C~125°C
DIELECTRIC WITHSTANDING VOLTAGE	1100V AC
INSULATION RESISTANCE	5000 MEGOHMS MIN(AT 25°C)
NUMBER OF CONTACTS	SOCKET, 4
WATER PROOF(MATED CONDITION)	IP67 CLASS
DURABILITY	500 CYCLES
SALT SPRAY	5% NACL, 48H

1. CONTACTS ARE NOT PART OF THIS ASSEMBLY AND MUST PURCHASED SEPARATELY.

NOTES:

THIS DOCUMENT CONTAINS PROPRIETARY INFORMATION AND SUCH INFORMATION MAY NOT BE DISCLOSED TO OTHERS FOR ANY PURPOSE OR USED FOR MANUFACTURING PURPOSES WITHOUT WRITTEN PERMISSION FROM THE AMPHENOL CORP.

UNLESS OTHERWISE SPECIFIED
LINEAR DIMENSIONS ARE IN **INCHES** TOLERANCES:
.XXXX=±.0005 ANGLES= ±2°
.XXX=±.010
.XX=±.03
.X=±.1
DIM. & TOL. PER ASME Y14.5M-1994;
DRM PER MIL-DTL-31000;
OTHER AMPHENOL STANDARDS: 9-3800
LEGENDS:
=FLAG NOTE CALL OUT
REFERENCE

THIRD ANGLE PROJECTION

APPROVALS		DATE
PREPARED BY:	Bruce Lee	2019/5/29
ENGINEER IN CHARGE:	Foster Peng	
DESIGN MANAGER:	Ran Xiao	
PRODUCT GROUP:	C&3	
AIPG DIVISION:		
MATERIAL SPEC	PROCESS SPEC	
N/A	N/A	

AMPHENOL INDUSTRIAL OPERATIONS
Amphenol Technology(Zhuhai)Co.,Ltd
No.63, Xinghan Road, Sanzao Town, Jinwan, Zhuhai, PRC

CONNECTOR, ELECTRICAL, PLUG
TYPE GTC06AQX28-BLS(025)(M25)(LC)
BLACK ZINC PLATED

SIZE	CAGE CODE	DOCUMENT NUMBER	REV
C	77820	GTC06AQX28-BLS(025)(M25)(LC)	PA1
SCALE: 2:1	REF:		SHEET 1 OF 1