REVISIONS					
REV	ECO	DESCRIPTION	DATE	BY	APPR
A1	–	RELEASE NEW DRAWING	11MAY20	BROOK	TOMMY

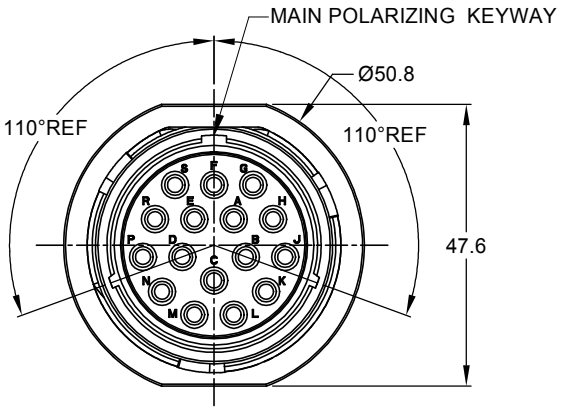

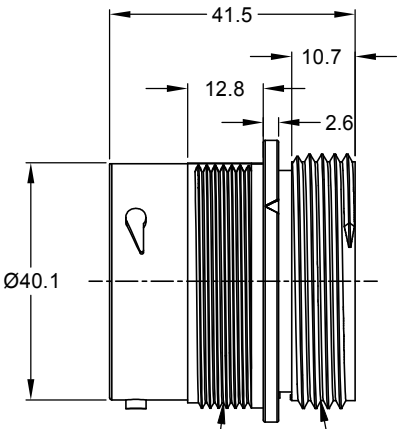

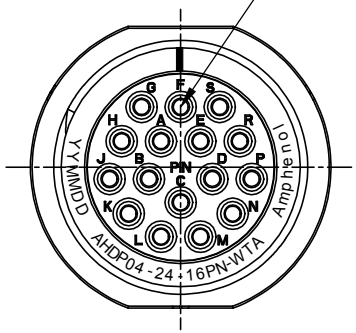

1 11/16-18 UNEF THREAD

1 11/16-12 UN THREAD

NOTES: UNLESS OTHERWISE SPECIFIED

1. MATERIAL:
   HOUSING: THERMOPLASTIC; BLACK
   SEAL: SILICONE RUBBER

2. MODIFICATIONS: THREADED ADAPTER(WTA);
   NORMAL DIA. WIRE SEAL.

3. SPECIFICATIONS:
   3.1 OPERATING TEMPERATURE: -55°C TO +125°C.
   3.2 DIELECTRIC WITHSTANDING VOLTAGE: LESS THAN 2 MILLIAMPS CURRENT LEAKAGE @ 1500 VOLTS AC.
   3.3 INSULATION RESISTANCE: 1000 MEGOHM MIN @ 25°C.
   3.4 MOISTURE RESISTANCE: IP67&IP69K (MATED CONDITION).
   3.5 MATING CYCLE DURABILITY: 100 CYCLES
   3.6 RoHS COMPLIANT

4. MATING PART: AHDP06-24-16S* (* = SEAL TYPE)

5. ALL DIMENSIONS ARE FOR REFERENCE USE ONLY.

6 CONTACT SIZE AND WIRE RANGE:

CONTACT SIZE	MIN. INSUL O.D.	MAX. INSUL O.D.	TYPICAL WIRE RANGE	CURRENT RATING
12	3.40 mm (.134 in)	4.32 mm (.170 in)	10-14 AWG (6.0-2.0mm²)	25 AMPS

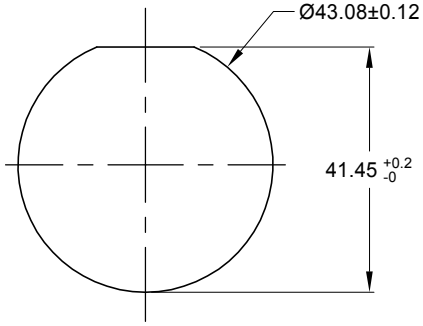

RECOMMENDED PANEL MOUNTING HOLE

RECOMMENDED PANEL THICKNESS:1.6 TO 4.7MM

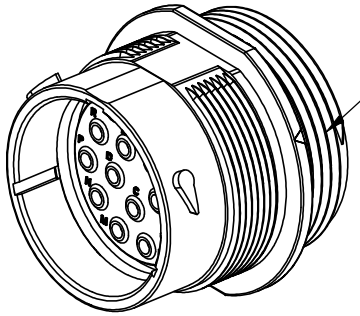

QUANTITY	PART NUMBER	DESCRIPTION	ITEM
	AHDP04-24-16PN-WTA	REF:HDP24-24-16PN-L024	

MATERIALS LIST

UNLESS OTHERWISE SPECIFIED
1) All dimensions are in metric(mm).
2) Tolerances are as follows:
1 PL DEC ±0.30
2 PL DEC ±0.15
3 PL DEC ±0.08
Fractions ±1/64
Angles ±1°
3) Note reference = x

MATERIAL SPECIFICATIONS:

PROCESS SPECIFICATIONS:

NEXT ASS'Y:

SIGNATURES		DATE
DRAWN:	BROOK.DING	11MAY20
CHECKED:	ORION.LI	12MAY20
ENGINEER:		
APPROVAL:	TOMMY.XIE	13MAY20
CUSTOMER:		

THIS DRAWING IS SUPPLIED FOR INFORMATION ONLY. DESIGN FEATURES, SPECIFICATIONS AND PERFORMANCE DATA SHOWN HEREON ARE THE PROPERTY OF THE AMPHENOL CORPORATION. NO RIGHTS OF REPRODUCTION ARE IMPLIED. ALL DIMENSIONS ARE SUBJECT TO NORMAL MANUFACTURING VARIATIONS.

Amphenol

Sine Systems - www.amphenol-sine.com
44724 Morley Drive
Clinton Township, MI 48036

RECEPT.,24 SZ,16-PIN,STND ARRANGEMENT,NORMAL SEAL,WTA,AHDP SERIES

SIZE	TYPE	DWG NO:	REVISION
B	C-	AHDP04-24-16PN-WTA	A1

SCALE: NONE | DURAMATE | SHEET 1 OF 1

TITLE: RECEPT.,24 SZ,16-PIN,STND ARRANGEMENT,NORMAL SEAL,WTA,AHDP SERIES
DWG NO: AHDP04-24-16PN-WTA
REV: A1
SH: 1
OF: 1