© TE Connectivity. All Rights Reserved.

REVISIONS					
P	LTR	DESCRIPTION	DATE	DWN	APVD
	A1	REVISED PER ECR-21-102854	13MAY2021	SK	DZ

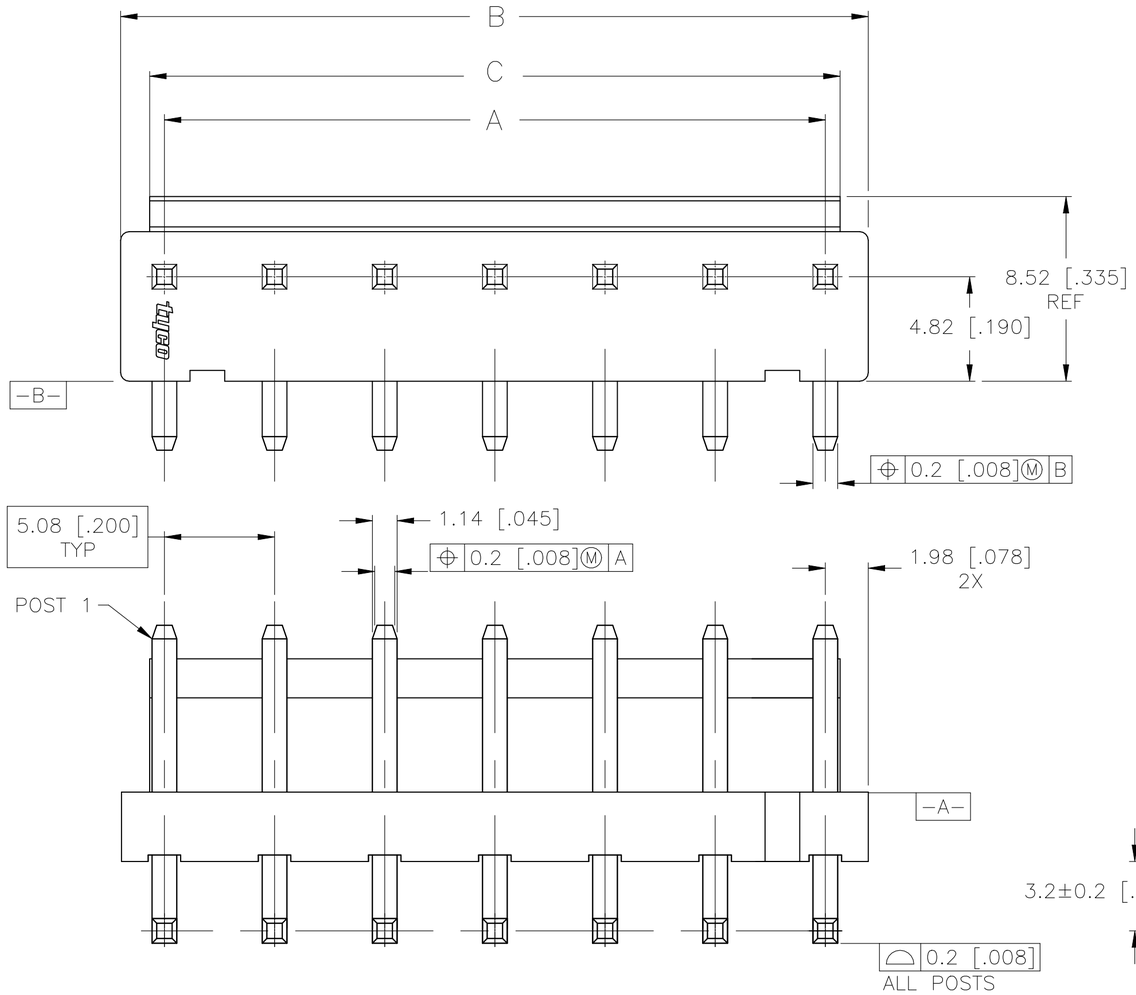

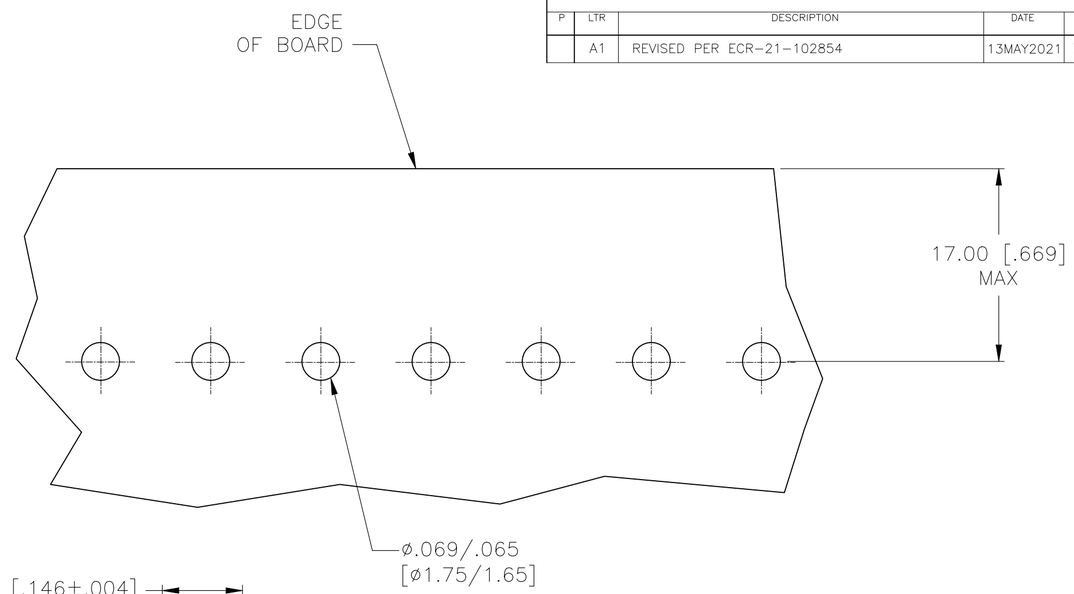

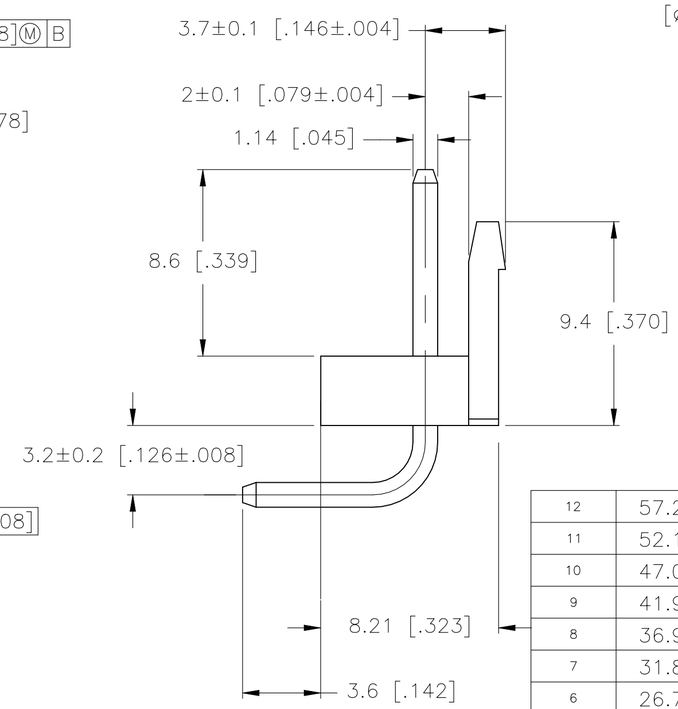

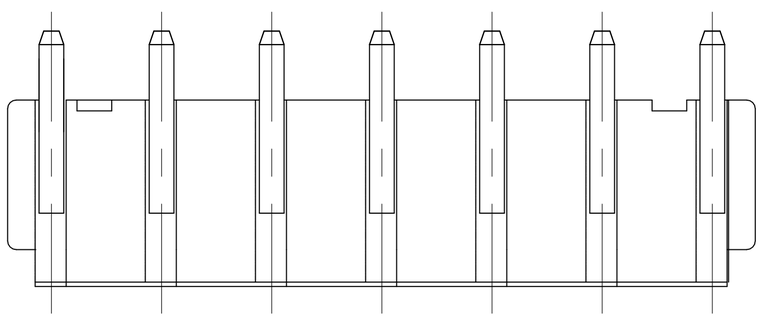

1. HOUSING MATERIAL: NYLON 66, UL 94V-0, NATURAL.
2. CONTACT MATERIAL: COPPER ALLOY
3. CONTACT PLATING: 0.002[.000080] MIN TIN OVER 0.00076[.000030] MIN NICKEL.

NO. OF POSITIONS	DIM C ±0.2 [.008]	DIM B ±0.3 [.012]	DIM A ±0.3 [.012]	PART NUMBER
12	57.22 [2.254]	59.84 [2.357]	55.88 [2.200]	1-1744048-2
11	52.14 [2.054]	54.76 [2.157]	50.8 [2.000]	1-1744048-1
10	47.06 [1.854]	49.68 [1.957]	45.72 [1.800]	1-1744048-0
9	41.98 [1.654]	44.6 [1.757]	40.64 [1.600]	1744048-9
8	36.9 [1.453]	39.52 [1.557]	35.56 [1.400]	1744048-8
7	31.82 [1.253]	34.44 [1.356]	30.48 [1.200]	1744048-7
6	26.74 [1.053]	29.36 [1.156]	25.4 [1.000]	1744048-6
5	21.66 [.853]	24.28 [.956]	20.32 [.800]	1744048-5
4	16.58 [.653]	19.2 [.756]	15.24 [.600]	1744048-4
3	11.5 [.453]	14.12 [.556]	10.16 [.400]	1744048-3
2	6.42 [.253]	9.04 [.356]	5.08 [.200]	1744048-2

1744048

METRIC

THIS DRAWING IS A CONTROLLED DOCUMENT.

DIMENSIONS: mm [INCHES]

TOLERANCES UNLESS OTHERWISE SPECIFIED:
0 PLC ± –
1 PLC ± 0.25 [.010]
2 PLC ± 0.15 [.006]
3 PLC ± –
4 PLC ± –
ANGLES ± –

MATERIAL: SEE NOTES
FINISH:

DWN S. HOOVER 28-APR-2004
CHK J. ELLIS 28-APR-2004
APVD J. ELLIS 28-APR-2004
PRODUCT SPEC
APPLICATION SPEC
WEIGHT

TE Connectivity

NAME: HEADER ASSEMBLY-ECONOMY POWER RIGHT ANGLE, .200 CENTER LINE

SIZE	CAGE CODE	DRAWING NO	RESTRICTED TO
A2	00779	C-1744048	—

CUSTOMER DRAWING | SCALE 5:1 | SHEET 1 OF 1 | REV A1