CLIFF

ISS.	AMEND	DATE
1	1st DRAWN	28/04/92
2	SEE #	19/07/93
3	RATING AMEND	11/08/98
4	WASH DIM DEL	28/07/00
5	RATING AMEND	30/10/06
6	NUT+WASH REF	17/03/09
7	RATING NOW IN VA	26/01/12
8	THREAD L=5.2 ADD	19/06/14
9	WAS Ø2.0	08/06/18

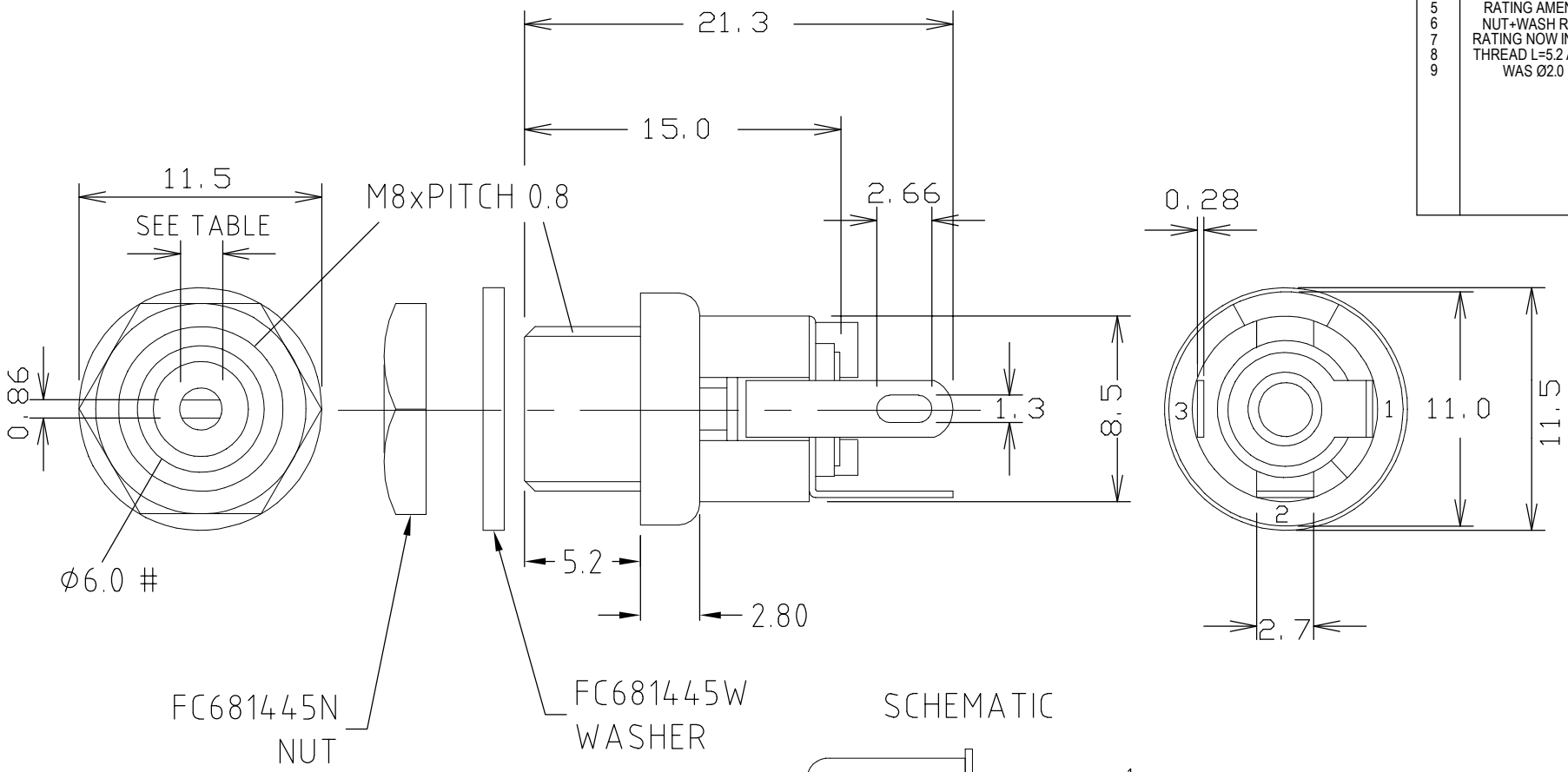

SCHEMATIC

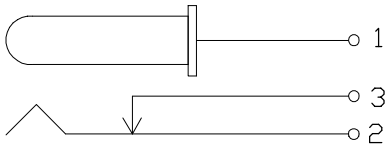

RATED: 60VA

VARIANTS		
CENTRE PIN	MODEL No.	PART No.
Ø2.1mm	SCD-026	FC681445
Ø2.5mm	SCD-026A	FC681446

RoHS COMPLIANT

TOLERANCE
NO DEC. PLACE ± 0.50
1 DEC. PLACE ± 0.20
2 DEC. PLACE ± 0.10
HOLE Ø ± 0.10
ANGLES ± 1/2°
UNLESS OTHERWISE STATED

Cliff Electronic Components Ltd.
76 Holmethorpe Avenue, Holmethorpe Industrial Estate,
Redhill, Surrey, RH1 2PF, England, UK
Tel: 01737-771375 Fax: 01737-766012 Website: www.cliffuk.co.uk

THE CONTENTS OF THIS DOCUMENT MUST NOT BE COPIED OR DISCLOSED TO A 3rd PARTY WITHOUT WRITTEN PERMISSION OF CLIFF UK. © 1992

DIMENSIONS IN MILLIMETERS UNLESS OTHERWISE STATED. WORK TO DIMENSIONS. REMOVE ALL BURRS. IF IN DOUBT ASK.

3rd ANGLE PROJECTION:

DO NOT SCALE

MATERIAL: BRASS / PBT

FINISH: Ni PLATED / Ag PLATED / AS MOULDED

DRAWN: C.A.M.J.

APPROVED: R.W.T.

TITLE: DC POWER JACK SCD-026

DRWG. No. FC681445

FORM: A4DRWGF