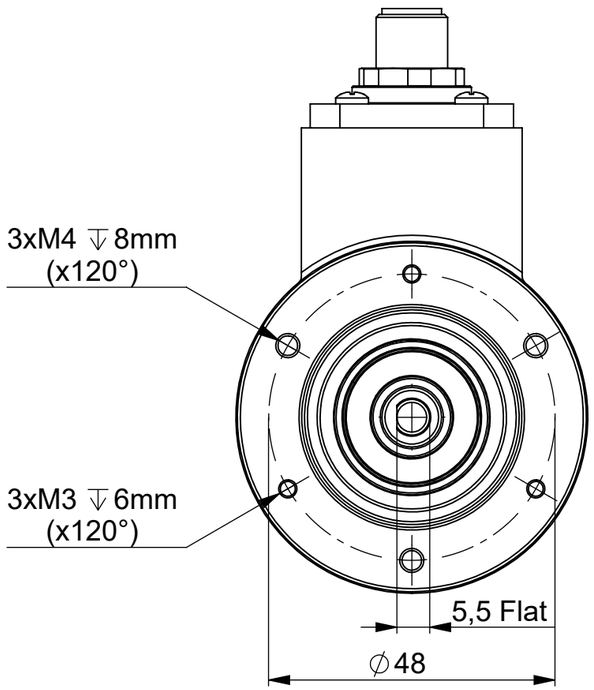

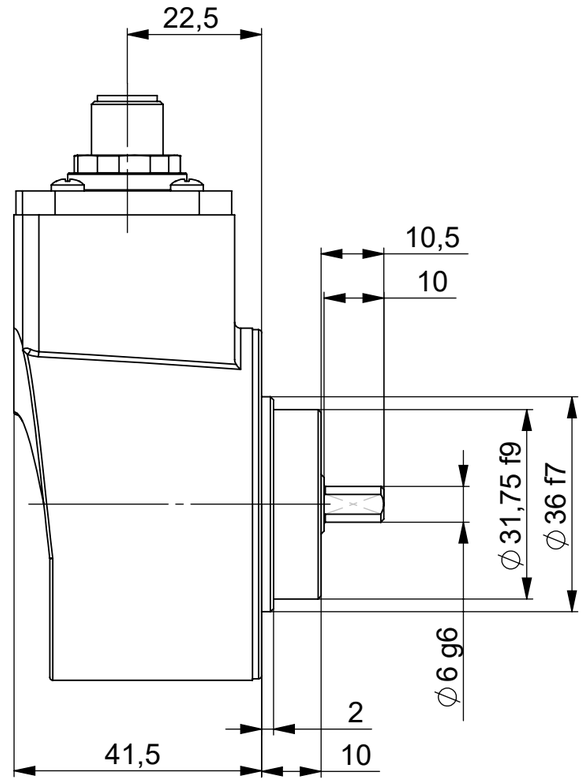

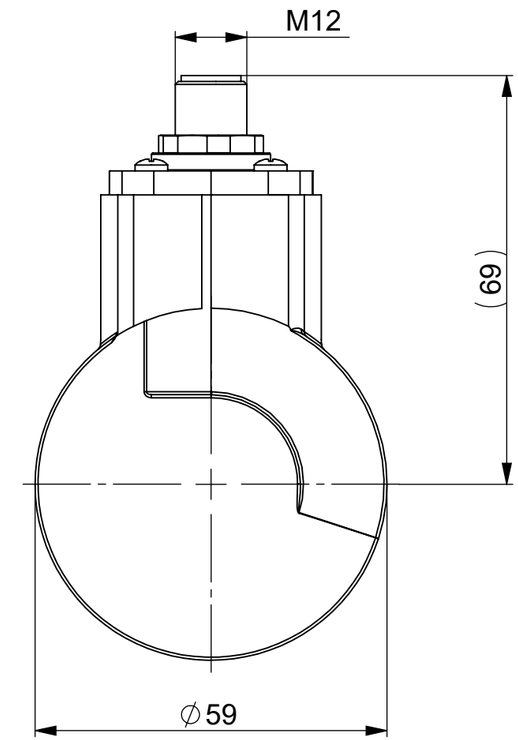

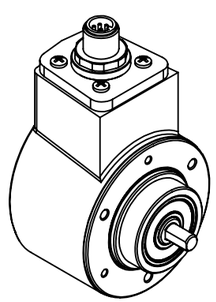

UNCONTROLLED COPY

FIRST ISSUE DATE : 21/10/2021
DRAWN : RHM
APPROVED : JHH
DATE : 21/10/2021

SENSATA TECHNOLOGIES PROPRIETARY AND CONFIDENTIAL. NEITHER THIS PRINT NOR THE INFORMATION CONTAINED HEREON IS TO BE USED AGAINST THE INTERESTS OF SENSATA TECHNOLOGIES OR AGAINST THE INTERESTS OF ANY OF ITS AFFILIATED COMPANIES OR WHOLLY OWNED SUBSIDIARIES.

Sensata Technologies
BEI Sensors

BEI SENSORS SAS
Espace Européen de l'Entreprise
9, rue de Copenhague
BP 70044 - F 67013 STRASBOURG Cedex
Tel : +33 (0)3 88 20 81 40

ECN :
DATE : 21/10/2021

UNLESS OTHERWISE SPECIFIED DIMENSIONS ARE IN MILLIMETERS [INCHES] AND ARE INTENDED AS NOMINAL. SEE PRODUCT SPECIFICATION FOR MORE DETAILS.

Housing material : Steel
Flange material : Aluminum
Shaft material : Stainless Steel

DO NOT SCALE DRAWING

EUROPEAN SYSTEM

TITLE: THM506_ M12 connector Output_Radial

SIZE	DWG NO.	REV.
A3	M167	A

SCALE	1/1	SOLIDWORKS	SHEET 1 OF 1

DEVICE:

PROJECT: