Material-No.	Order-No.	Shell Size / for No. of Contacts	B ±0.1	C ±0.3	D ±0.3	øF1 min - max	øF2 max I	Rubber bushing	H ±0.3	U ±0.4	V ±0.15	W +0.2
1731140961	FMK1G-09P7-6191	1 / 9	25	31.6	39.5	3 - 9.5	6.5	FKT1-2	42	30.8	25	16.9
1731140969	FMK2G-15P7-6191	2 / 15	33.3	40	41	3 - 8.5	6.5	FKT1-2	43.5	39.1	33.3	25.2
1731140977	FMK3G-25P7-6191	3 / 25	47.04	53.7	45	3 - 8.5	8	FKT1-2A	47.5	53	47.04	38.9

øF1 = Cable diameter without rubber bushing
øF2 = Cable diameter with rubber bushing

FMKyG-xxP7-6191

*1) *2)

e.g. FMK3G-25P7-6191

*1) y for hood size 1, 2 or 3
*2) xx No. of contacts 09, 15 or 25

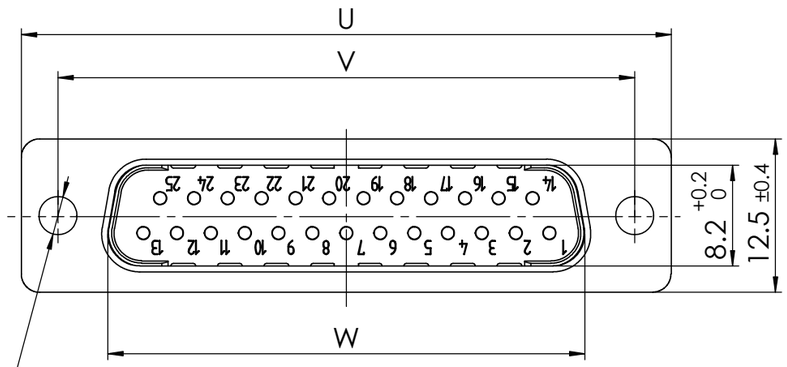

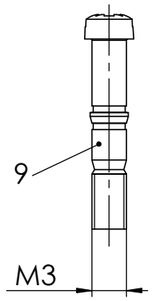

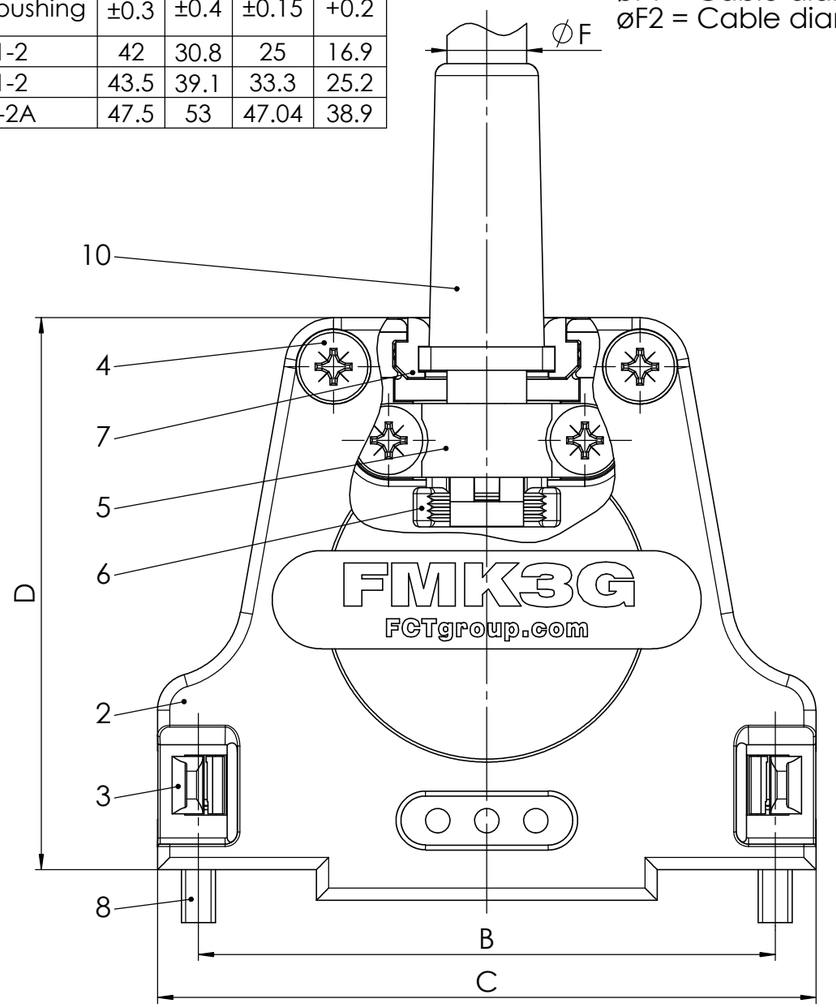

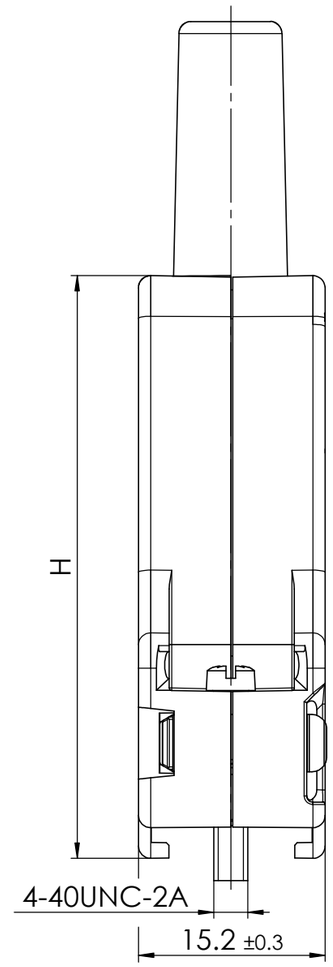

Crimp contacts are separately enclosed

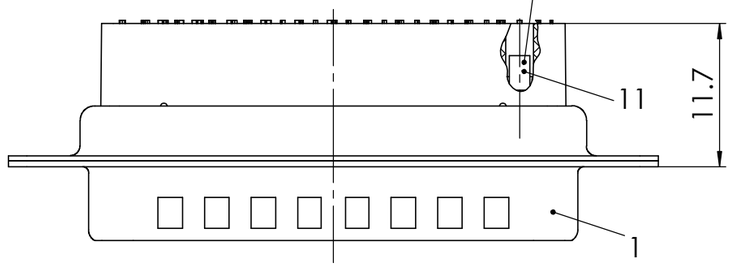

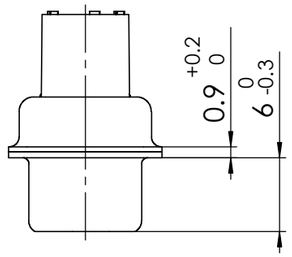

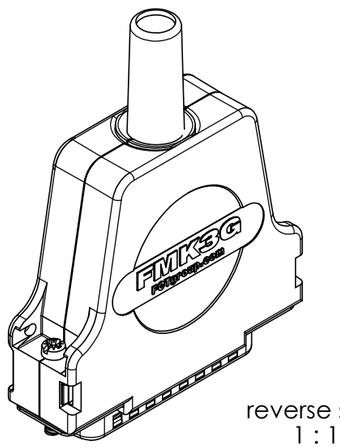

reverse side
1 : 1

RoHS compliant
by exemption

Packing unit on supplement AM0665

max. torque are 40 Ncm
Part-No. 4, 5, 10 and 11 not mounted
FMK1G-09P7-6191 with Part-No. 6 alternatively
in Zinc die-cast, tin plated
FMK1G-09P7-6191 without Part-No. 7

No.	St.	Part	Type Description/Material	Surface plating/Colour/Class
11	xx	Crimp contact	FK20PL-02V	0.2µm Au / AWG 20-24
10	1	Rubber bushing	TPE	black
9	2	Locking screw	FVS1/5-K1163 M3 / Steel	nickel plated
8	2	Locking screw	FVS1/5-K1163 4-40 / Steel	nickel plated
7	0/2	Cable reduction plate	Zinc die-cast	nickel plated
6	1	Strain relief	ABS	nickel plated
5	1	Cable clamp	Steel	tin plated
4	4	Screw	Case hardened steel	zinc plated
3	2	Catch spring	PEI	black
2	1	Hood	FMKyG / Zinc die-cast	nickel plated
1	1	D-Sub Crimp connector	FLxxP7-K120	

SYMBOLS
E = 0
E = 0
E = 0
S = 0
▼ = 0
C = 0
☒ = 0
■ = 0
▽ = 0

THIS DRAWING CONTAINS INFORMATION THAT IS PROPRIETARY TO MOLEX ELECTRONIC TECHNOLOGIES, LLC AND SHOULD NOT BE USED WITHOUT WRITTEN PERMISSION

DIMENSION UNITS: mm
SCALE: 2:1
MEASUREMENTS WITHOUT TOLERANCE ACC. TO ISO 2768-m

CURRENT REVISION
DRWN: DRAWN BY ameyerrichte 13-04-2021
APPR: APPR BY hstanisch 15-04-2021

INITIAL REVISION
DRWN: DRAWN BY ameyerrichte 13-04-2021
APPR: APPR BY hstanisch 15-04-2021

REV. 1 CH.-NO.

REPLACEMENT FOR:

THIRD ANGLE PROJECTION

DRAWING: A3-SIZE

molex

FCT Hood Connector Set

PRODUCT CUSTOMER DRAWING

MATERIAL NUMBER: see table

REVISION: 1

DOCUMENT NUMBER: FMKyG-xxP7-6191

CUSTOMER: GENERAL MARKET

SHEET NUMBER: 1 OF 1

COMMENT:
ALL RIGHTS ARE RESERVED BY US FOR THIS DRAWING, WITHOUT OUR PRIOR CONSENT,
IT MAY NEITHER BE DUBLICATED NOR MADE AVAILABLE TO A THIRD PARTY,
AND IT ALSO MAY NOT BE IMPROPERLY USED BY TE RECEIVER, OR A THIRD PARTY.