PART NUMBER
SZL-VL-S-A-N-M

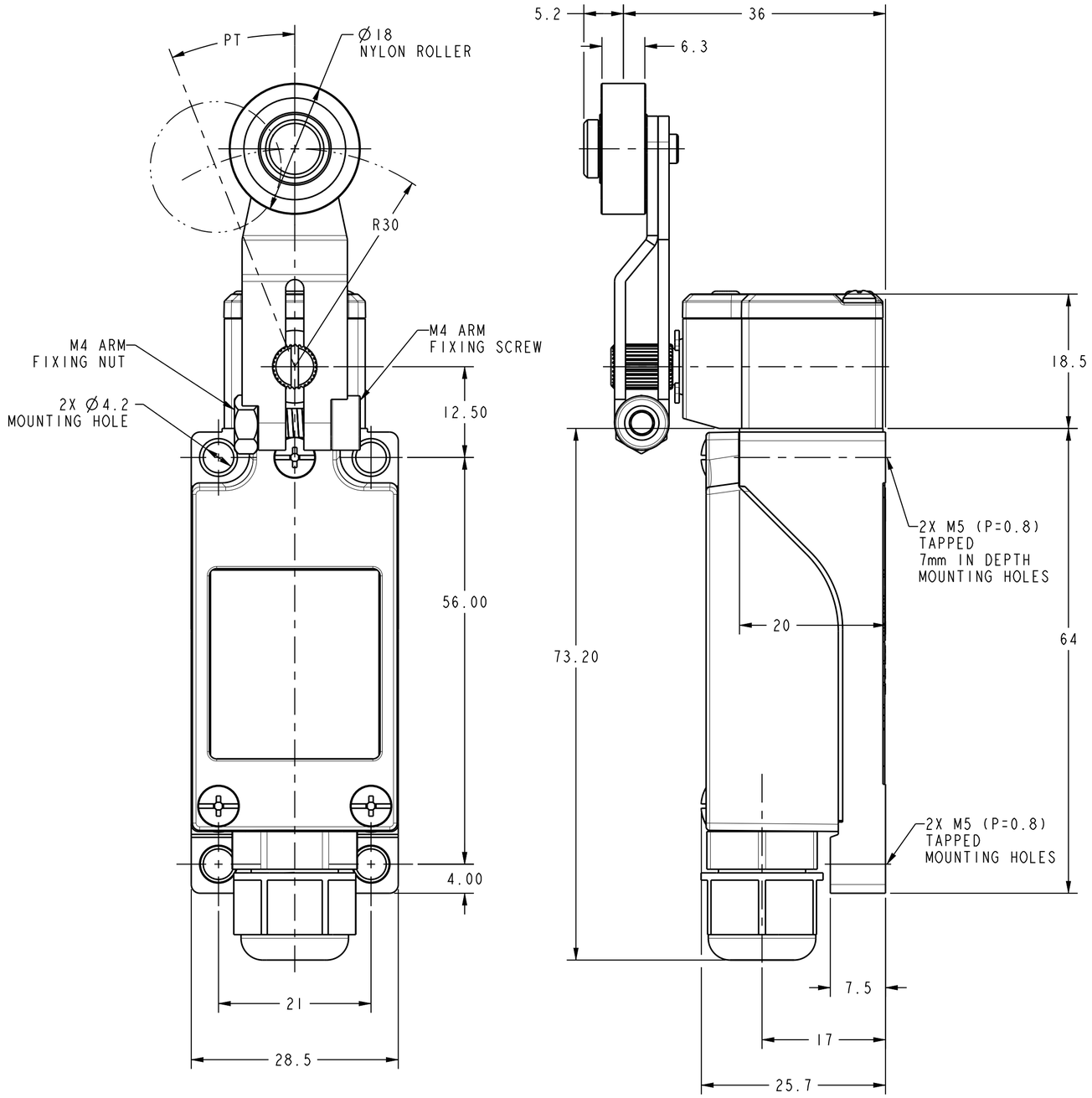

LABEL

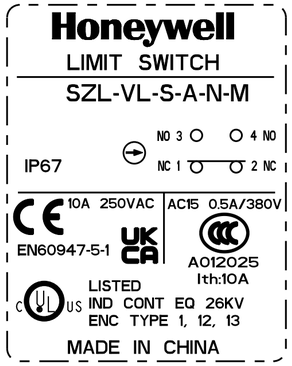

REVISION HISTORY					
REV	DOCUMENT	DESCRIPTION	CHG'D BY	DATE	APPROVED
A	0137908	RELEASED	RGA	2017-04-04	Z. JIANBIAO
B	0139218	REVISED PER ECO	RKA	2017-06-07	Z. JIANBIAO
C	0156316	REVISED PER ECO	HN	2019-05-09	M. MANTUA
D	00007246	UKCA MARK UPDATED	SNH	2021-11-02	Z. SEAN

SPECIFICATIONS	
ELECTRICAL RATINGS	AC-15 A300 (380 VAC/0.5A) DC-13 Q300 (220 VDC/0.05A)
INITIAL CONTACT RESISTANCE	INITIAL CONTACT RESISTANCE < 25mΩ
INSULATION RESISTANCE	>100MΩ AT 500 VDC
SHOCK	30G, CONFORMING TO IEC 60068-2-27
VIBRATION	10G, 10Hz TO 55Hz DISPLACEMENT AMPLITUDE 0.75mm, CONFORMING TO IEC 60068-2-6
OPERATING SPEED	0.05mm-2m/sec
OPERATING FREQUENCY	MECHANICAL: 120 OPS/MIN ELECTRICAL: 30 OPS/MIN
INSULATION RESISTANCE	>100MΩ@500V DC
DEGREE OF PROTECTION	IP67
RATED THERMAL CURRENT	10A
DIELECTRIC STRENGTH	1890VAC FOR 1 MIN BETWEEN CURRENT CARRYING PARTS 1890VAC FOR 1 MIN BETWEEN NON-CURRENT CARRYING PARTS
SERVICE LIFE	MECHANICALLY $1X10^7$ ELECTRICALLY $5X10^5$
OPERATING TEMPERATURE	-20~+70°C (-4~+158°F) (WITH NO ICING)
HUMIDITY	<95%RH
WEIGHT	120-150g

CIRCUIT DIAGRAM

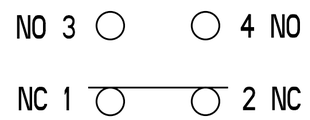

MOUNTING HOLES

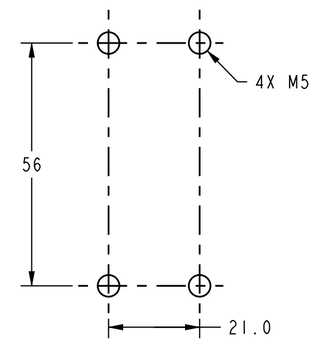

WIRING DIAGRAM

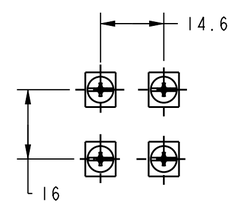

CHARACTERISTICS	
OPERATING FORCE	18 N.cm MAX
RELEASE FORCE	1.5 N.cm MIN
PRE-TRAVEL	25° MAX
DIFFERENTIAL-TRAVEL	15° MAX
OVERTRAVEL	70° MIN
MIN TRAVEL TO ACHIEVE POSITIVE OPENING	40°

ELECTRICAL DATA
CONTACT ARRANGEMENT S P D T

UNLESS OTHERWISE SPECIFIED
DIMENSIONS ARE IN mm
DECIMAL TOL NO PLACE --- ±0.5
1 PLACE --- ±0.3
2 PLACE --- ±0.15
3 PLACE --- ±0.05
ANGULAR TOL - ±2° CHAMFER - ±5°

THIRD ANGLE PROJECTION

MATERIAL

FINISH

APPLICABLE DOCUMENTS: ASME Y14.100-2013
ASME Y14.5-2009

COMPUTER GENERATED DRAWING: PRO/ENGINEER

Honeywell

TITLE SWITCH BASIC

SIZE	CAGE CODE	DWG NO	TYPE	REV
A2	-	SZL-VL-S-A-N-M	I	D

SCALE 2:1 REF WT: SHEET 1 of 1

RELEASE DATE	2017-04-04
DRW: A. RAJAGOPAL	2017-04-04
RDE: Z. JIANBIAO	2017-04-04
QA: F. LEO	2017-04-04
CHK: S. HONGGUI	2017-04-04

HONEYWELL CONFIDENTIAL
THIS DOCUMENT CONTAINS PROPRIETARY INFORMATION AND SUCH INFORMATION MAY NOT BE DISCLOSED TO OTHERS FOR ANY PURPOSE, NOR USED FOR MANUFACTURING PURPOSES WITHOUT WRITTEN PERMISSION FROM HONEYWELL

Downloaded By: Edmonson,Stephanie - 12 February 2022 18:48:13 UTC HEC: EAR99 TEC: EAR99 GOV: ESO1.0
Honeywell Proprietary & Confidential Released D SZL-VL-S-A-N-M
The HEC and TEC codes identified in this watermark supersede any conflicting HEC or TEC codes displayed in the drawing.