REVISIONS					
REV	ECO	DESCRIPTION	DATE	BY	APPR
A1	–	RELEASE NEW DRAWING	11/AUG/20	IAN	TOMMY

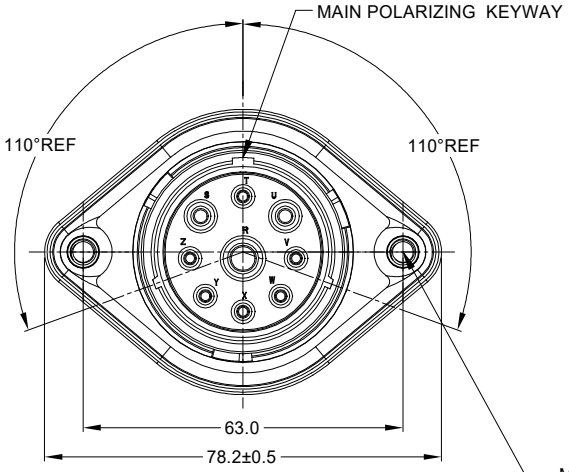

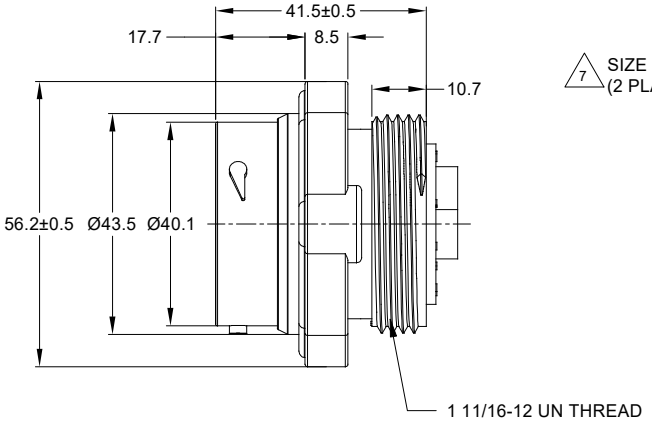

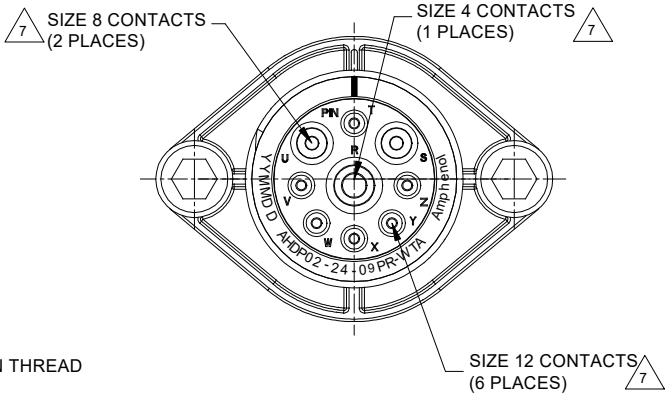

NOTES: UNLESS OTHERWISE SPECIFIED

1. MATERIAL:
   HOUSING: THERMOPLASTIC; BLACK
   SEAL: SILICONE RUBBER
   THREADED INSERT: STAINLESS STEEL

2. MODIFICATIONS: WIDE THREAD ADAPTOR (WTA);
   REDUCED DIA. WIRE SEAL
   SEALED PANEL MOUNT

3. SPECIFICATIONS:
   3.1 OPERATING TEMPERATURE: -55℃ TO +125℃.
   3.2 DIELECTRIC WITHSTANDING VOLTAGE: LESS THAN 2 MILLIAMPS CURRENT LEAKAGE @ 1500 VOLTS AC.
   3.3 INSULATION RESISTANCE: 1000 MEGOHM MIN @ 25℃.
   3.4 MOISTURE RESISTANCE: IP67&IP69K (MATED CONDITION).
   3.5 MATING CYCLE DURABILITY: 100 CYCLES
   3.6 RoHS COMPLIANT

4. MATING PART: AHDP06-24-09S* (* = SEAL TYPE)

5. ALL DIMENSIONS ARE FOR REFERENCE USE ONLY.

6. RECEPTACLE IS SUPPLIED WITH DUST CAP(NOT SHOWN).

7. CONTACT SIZE AND WIRE RANGE:

CONTACT SIZE	MIN. INSUL O.D.	MAX. INSUL O.D.	TYPICAL WIRE RANGE	CURRENT RATING
4	6.63 mm (.261 in)	7.42 mm (.292 in)	6 AWG (16.0-13.0mm²)	100 AMPS
8	3.43 mm (.135in)	5.59 mm (.220 in)	8-10 AWG (10.0-5.0mm²)	60 AMPS
12	2.46 mm (.097 in)	4.01 mm (.158 in)	10-14 AWG (6.0-2.0mm²)	25 AMPS

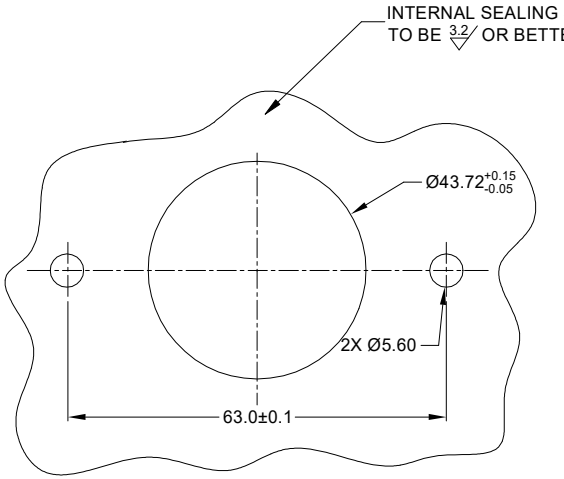

RECOMMENDED PANEL
MOUNTING HOLE

RECOMMENDED PANEL
THICKNESS:1.6 TO 4.7MM

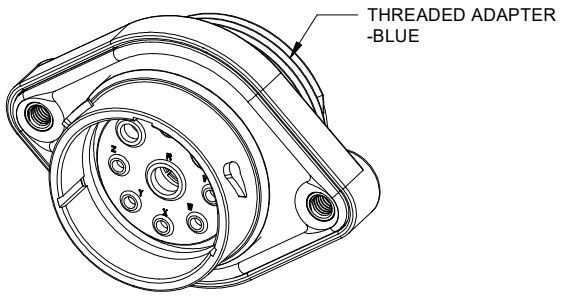

QUANTITY	AHDP02-24-09PR-WTA PART NUMBER	DESCRIPTION	ITEM

MATERIALS LIST

UNLESS OTHERWISE SPECIFIED
1) All dimensions are in metric(mm).
2) Tolerances are as follows:
1 PL DEC ±0.30
2 PL DEC ±0.15
3 PL DEC ±0.08
Fractions ±1/64
Angles ±1°
3) Note reference = X

MATERIAL SPECIFICATIONS:

PROCESS SPECIFICATIONS:

NEXT ASS'Y:

SIGNATURES		DATE
DRAWN:	IAN.XIAO	11/AUG/20
CHECKED:	ORION	12/AUG/20
ENGINEER:		
APPROVAL:	TOMMY	14/AUG/20
CUSTOMER:		

THIS DRAWING IS SUPPLIED FOR INFORMATION ONLY. DESIGN FEATURES, SPECIFICATIONS AND PERFORMANCE DATA SHOWN HEREON ARE THE PROPERTY OF THE AMPHENOL CORPORATION. NO RIGHTS OF REPRODUCTION ARE IMPLIED. ALL DIMENSIONS ARE SUBJECT TO NORMAL MANUFACTURING VARIATIONS.

Amphenol

Sine Systems - www.amphenol-sine.com
44724 Morley Drive
Clinton Township, MI 48036

9 POS, RECEPTACLE, PIN, PANELMATE
AHDP SIZE 24, RD SEAL, WTA

SIZE	TYPE	DWG NO:	REVISION
B	C-	AHDP02-24-09PR-WTA	A1

SCALE: NONE | DURAMATE | SHEET 1 OF 1

TITLE: 9 POS, RECEPTACLE, PIN, PANELMATE, AHDP SIZE 24, RD SEAL, WTA
DWG NO: AHDP02-24-09PR-WTA
REV: A1
SH: 1
OF: 1