The supplier acknowledges that, with the acceptance of the drawing, he is in a position to manufacture the illustrated part in accordance with the drawing in reproducible from and series production. Through the selected manufacturing processes no impurments will arise in the material and structure which could subsequently lead to an impairment of the components, Varied agreements ever and above that are not valid. Deviations from this rule must be writing and must be signed by the purchaser.

This drawing may not be copied, reproduced or made available to third parties in any way whatsoever without or prior written approval.

Technische Daten/ technical data	:	Akkupack/ batterypack
Chemie/ chemistry	:	Lithium Ion
Zellenzahl/ no. of cells	:	3 Zellen/ cells INR18650 M26 LG ; 3S1P
Kapazität/ capacity	:	nom. 2600mAh discharge at 0.2C min. 2500mAh discharge at 0.2C ta:20°C; EV(Discharge End Voltage): 2.75V per cell
Innenwiderstand/ impedance	:	< 240mOhm (battery and safetyboard)
Nominalspannung/ nominal voltage	:	10.8V
Standard Ladespannung/ standard charge voltage	:	12.6V±1%
Standard Entladespannung/ standard discharge voltage	:	8.25V
Nominaler Ladestrom/ nominal charge current	:	0.5C
Maximaler Ladestrom/ maximum charge current	:	1C
Ladeendstrom/ charge end current	:	0.01C recommended
Maximaler Entladestrom/ maximum discharge current	:	5A (limited by safety board)
Anwendungstemperaturbereich/ ambient temperature range	:	0°C...+45°C charge −20°C...+60°C discharge −20°C...+20°C storage max. 1 year −20°C...+45°C storage max. 3months
Selbstentladung/ self discharge	:	≤ 5% / month at20°C ≤ 10% / month at30°C ≤ 20% / month at40°C
Standards/	:	UN 3480, Subsection 38.3 All cells and batterypacks type tested according to UN manual of test and criteria subsection 38.3

Technische Daten/ technical data	:	Sicherheitsschaltung/ safety board
Überladeschutzspannung/ over charge voltage detection	:	4.35V±25mV per cell
Wiedereinschaltspannung/ over charge release voltage	:	4.15V±50mV per cell
Entladeabschaltspannung/ over discharge detection voltage	:	2.4V±80mV per cell
Wiedereinschaltspannung/ over discharge release voltage	:	3V±100mV per cell
Nominaler Lade/Entladestrom / nominal operating current	:	5A
Entlade Abschaltstrom/ discharge cut off current	:	12A± 2A
Kurzschlussschutz/ short circuit protection	:	gegen äußeren Kurzschluss/ against external short circuit
Temperarurschalter/ temperature switch	:	PTC: JK-P730 20V/ 7.3A at 25°C ; 6.2A at 40°C
MOSFET	:	im Pluszweig in positive path
Rückstellkriterium/ release condition	:	Last trennen, Aktiv nach Anladen/ cut load, release after charging up
Nettogewicht/ net weight	:	145g
Leiterplattenmaterial/ pcb material	:	FR4
Standards	:	CE, UKCA

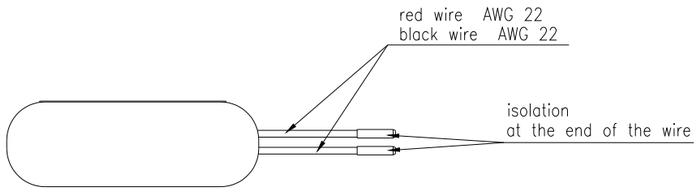

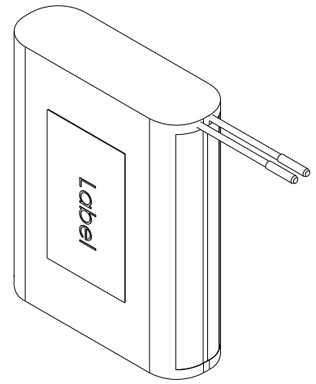

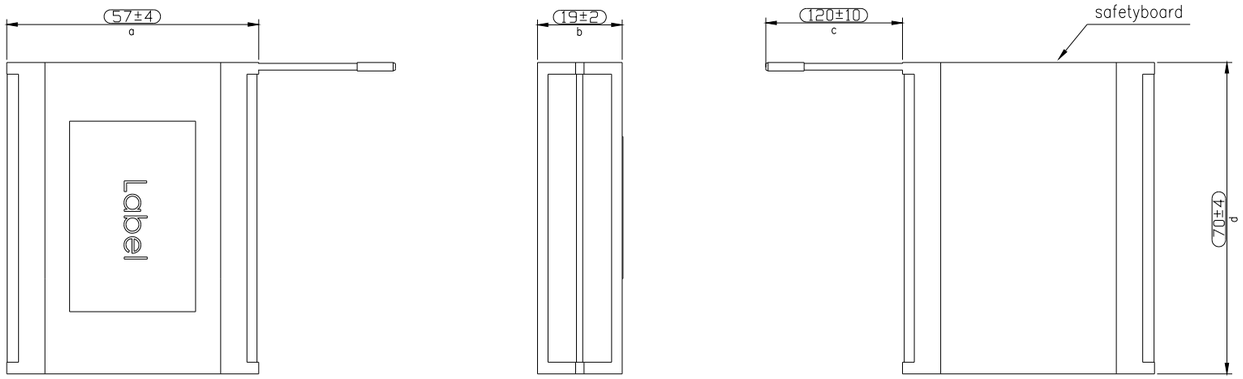

batterypack covered with 1 layer of blue shrinktube

Part Number	SAP Description
2447-3031-02	Li-Ion-10.8V-2600mAh-3S1P-M26
2447-3031-202	Li-Ion-10.8V-2600mAh-3S1P-M26/UK

Version	Change	Date	Name
V4	standards updated	01.06.2021	DS
V3	corrected label direction	17.06.2020	XJ
V2	change request: DE-20-5013	24.03.2020	MSt
V1	part number overview added	15.04.2019	DS

Allowable deviation general tolerances	Surface:	Material:
DIN ISO 2768-m		Scale (DIN A2): 1:1
	Date	Name
Drawn by	25.01.2019	MSt
Changed by		

Projection method: 1

Weight

Product name:

Li-Ion-10.8V-2600mAh-3S1P-M26

Part number: **2447-3031-X02**

Project: **IS-00423**

Application range for inquiry: **AN-IS-2013-00423**

Sheet: 1/1