Dec.1.2022 Copyright 2022 HIROSE ELECTRIC CO., LTD. All Rights Reserved.
In case of consideration for using Automotive equipment / device which demand high reliability, kindly contact our sales window correspondents.

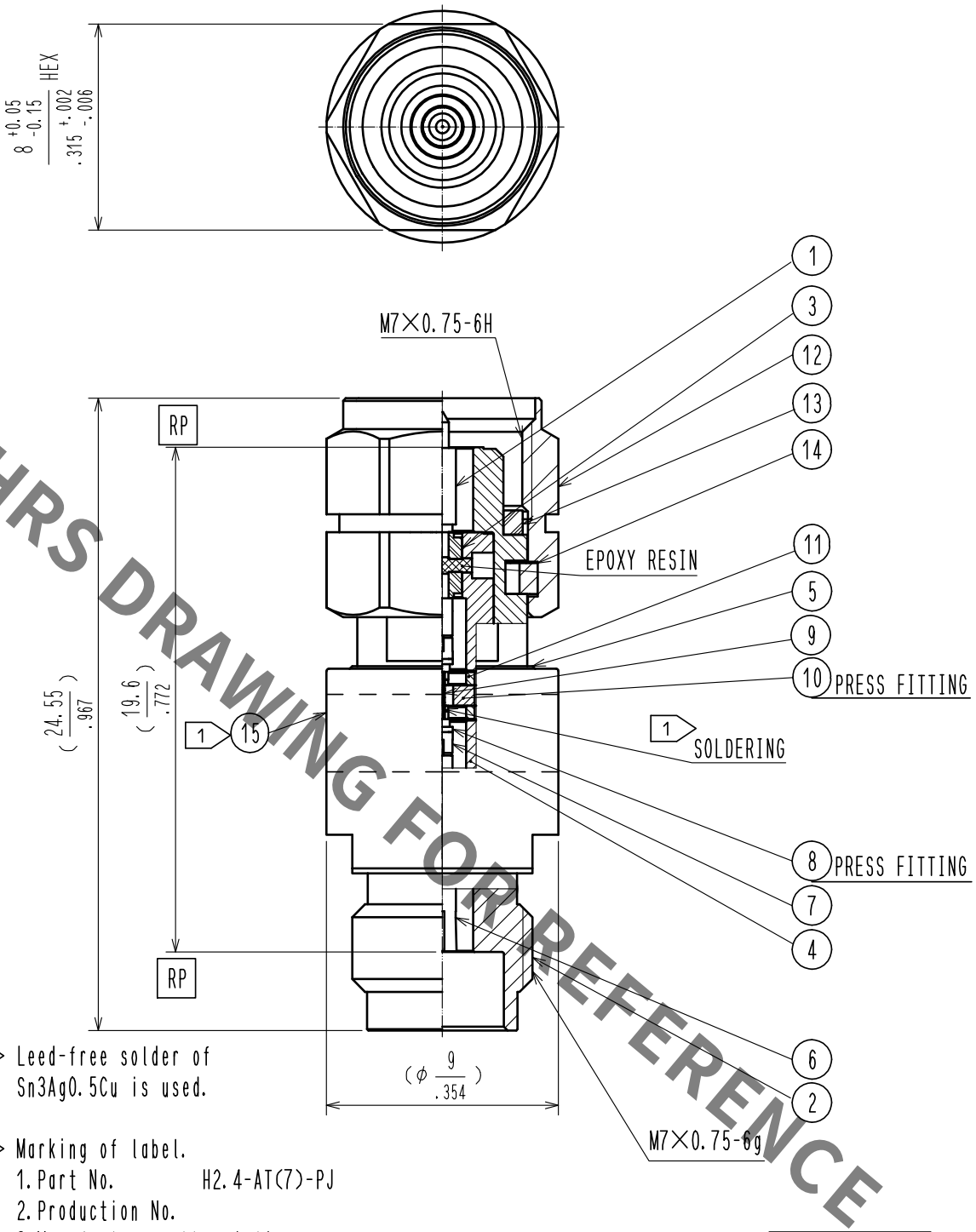

HRS DRAWING FOR REFERENCE

NOTE 1 Leed-free solder of Sn3Ag0.5Cu is used.

2 Marking of label.
1. Part No. H2.4-AT(7)-PJ
2. Production No.
3. Manufacturer abbreviation.

RoHS COMPLIANT

NO.	MATERIAL	FINISH . REMARKS	NO.	MATERIAL	FINISH . REMARKS
8	BRASS	GOLD PLATING			
7	BERYLLIUM COPPER	GOLD PLATING	15		LABEL
6	STAINLESS STEEL	PASSIVATE	14	BERYLLIUM COPPER	NICKEL PLATING
5	STAINLESS STEEL	PASSIVATE	13	SILICON RUBBER	
4	STAINLESS STEEL	GOLD PLATING	12	STAINLESS STEEL	PASSIVATE
3	PTFE		11	ALUMINIUM	
2	BERYLLIUM COPPER	GOLD PLATING	10	BRASS	GOLD PLATING
1	BRASS	GOLD PLATING	9	ALUMINA	

UNITS	SCALE	COUNT	DESCRIPTION OF REVISIONS	DESIGNED	CHECKED	DATE
mm	4 : 1	0				

HIROSE ELECTRIC CO., LTD.

APPROVED	: TS. NOBE	18.07.10	DRAWING NO.	EDC-384093-00-00
CHECKED	: MH. OGUSU	18.07.10	PART NO.	H2.4-AT(7)-PJ
DESIGNED	: HA. NISHIMURA	18.07.10	CODE NO.	CL354-0313-0-00
DRAWN	: HA. NISHIMURA	18.07.10		0 1/1

FORM HC0011-5-51