REV.	ECN.NO.	MODIFY.CONTENT	DATE
A	17080005	NEW RELEASE	08/29/17

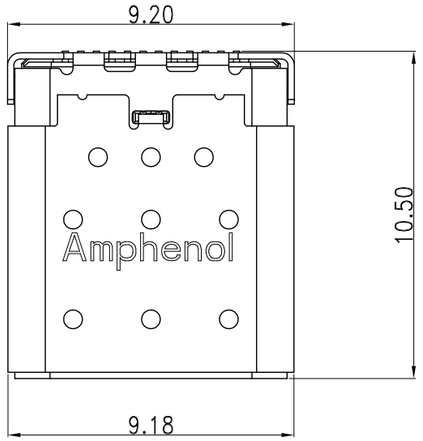

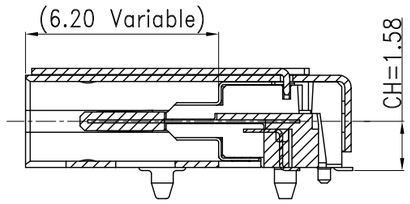

SECTION H-H

Circuit Mapping Table:
(电路对照表)

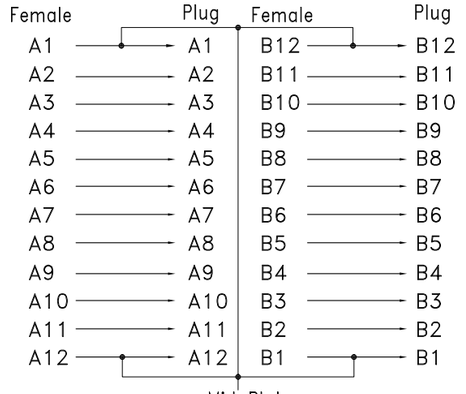

Pin No	Signal Name	Mating Sequence	Pin No	Signal Name	Mating Sequence
A1	GND	First	B12	GND	First
A2	TX1+	Second	B11	RX1+	Second
A3	TX1−	Second	B10	RX1−	Second
A4	VBUS	First	B9	VBUS	First
A5	CC1	Second	B8	SBU2	Second
A6	D+	Second	B7	D−	Second
A7	D−	Second	B6	D+	Second
A8	SBU1	Second	B5	CC2	Second
A9	VBUS	First	B4	VBUS	First
A10	RX2−	Second	B3	TX2−	Second
A11	RX2+	Second	B2	TX2+	Second
A12	GND	First	B1	GND	First
SHELL		GND	SHELL		GND

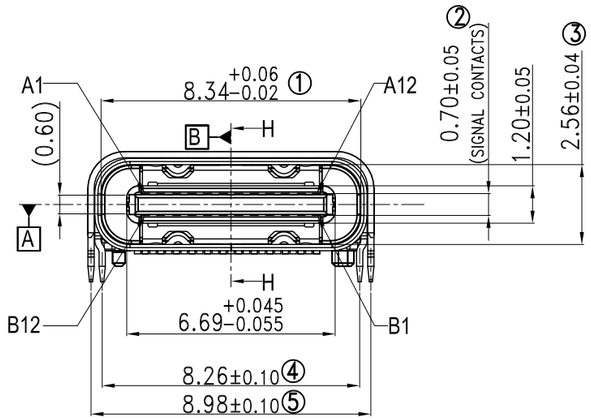

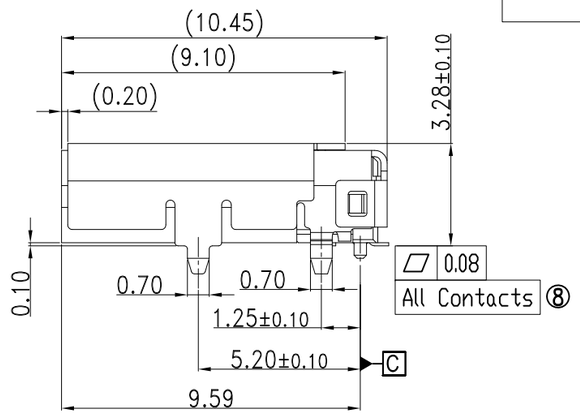

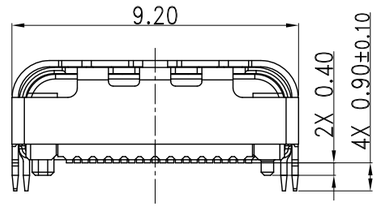

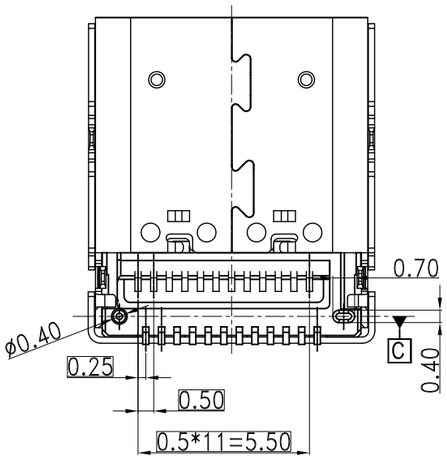

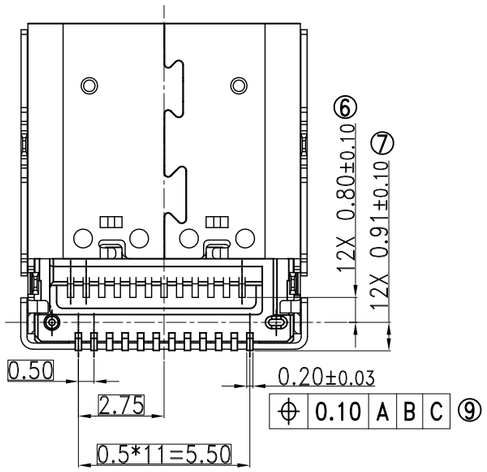

NOTE/注释：

1. SPECIFICATION/规格:

1.1 Rated current（额定电流）: 6.0 A For VBus Pin and Gnd Pin
1.0 A For SBU1/SUB2
0.25A For Other Pin

1.2 Voltage rating（额定电压）: 5V AC

1.3 Contact Resistance（接触阻抗）: 40 m Ω Max.

1.4 Insulation Resistance（绝缘阻抗）:1000MΩ Min.

1.5 Withstanding voltage（耐电压）: 500 VAC/minute

1.6 Mating force（插入力）: 5~20N.

1.7 Unmating force（拔出力）: 8~20N.

1.8 Material should be fulfilled Amphenol spec# SSN002 AND Customer Require
For halogen free products,Also need to meet SSN004
材料应满足安费诺规格# SSN002和客户需求、无卤产品还需要满足SSN

1.9 Dimension marked ⓧⓧ should be checked by QC and process.
Marked ⓧⓧ Should also check the CPK (CPK>=1.33) data.
如果尺寸有标记 ⓧⓧ 号需要QC进行检验。
如果有加注 ⓧⓧ 需要测量CPK(CPK>=1.33)尺寸.

GENERAL	TOLERANCE	FILE.NO.	C12401824	PART.NO.	12401824E412A	DRAWN	Allan.Lai	MATERIAL		SCALE	1:1
x.±0.50	x. °± 5 °	REV.	A	TITLE	USB TYPE C CONNECTOR RIGHT ANGLE DUAL ROW SMT	CHECKED	Weison.lu	DATE	08/29/17	UNIT	mm
.x±0.38	.x °± 2 °	SIZE		SHEET	1 OF 2	APPROVED	Tom	Amphenol Shouhmin Industry			
.xx±0.25	.xx± 1 °	A4									

REV.	ECN.NO.	MODIFY.CONTENT	DATE
A	17080005	NEW RELEASE	08/29/17

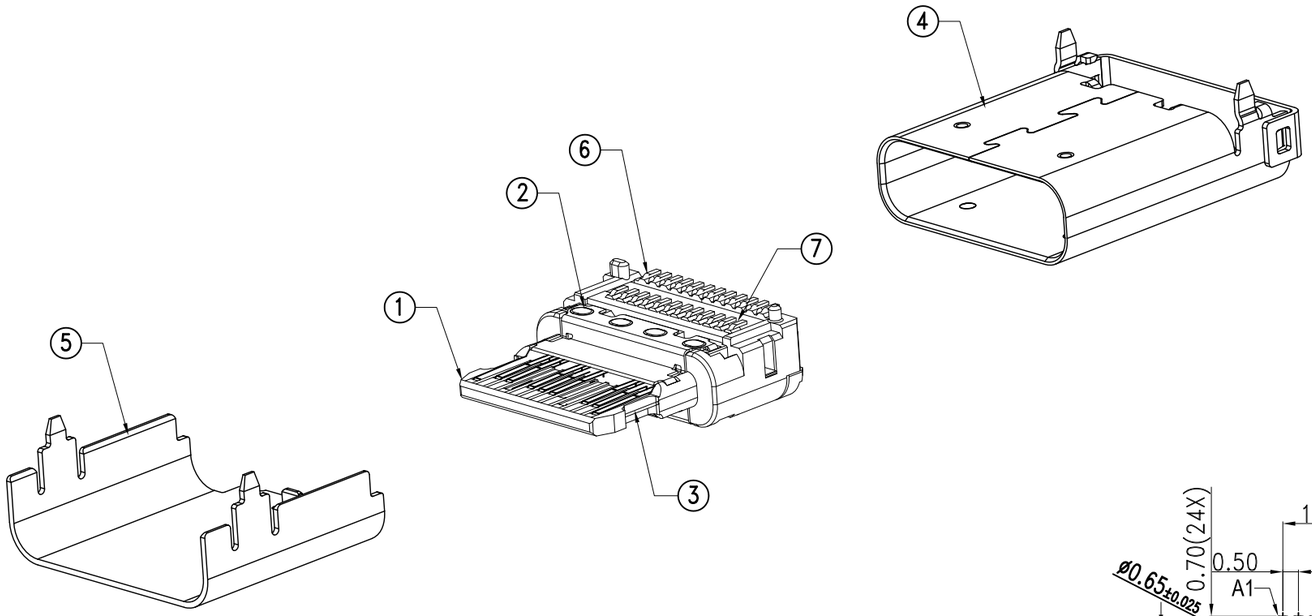

EXPLODE VIEW (SCALE N/A)

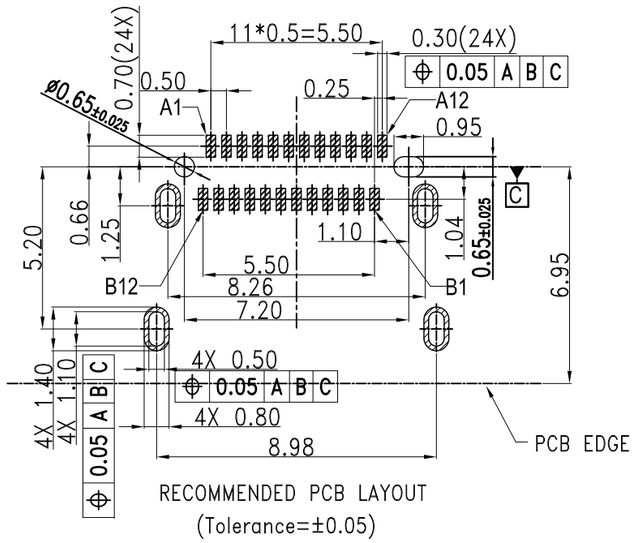

RECOMMENDED PCB LAYOUT
(Tolerance=±0.05)

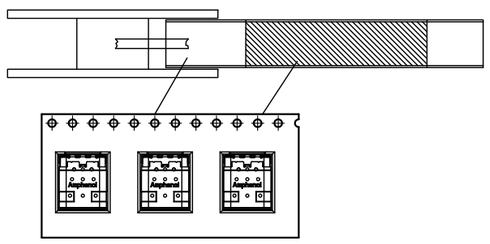

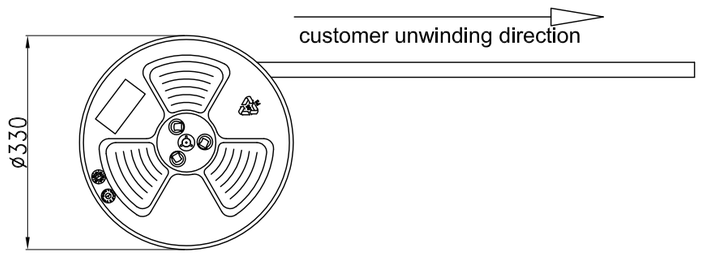

PACK DIRECTION

ITEM	DESCRIPTION	Q'TY	MATERIAL	PART NO.	FINISH
7	BOTTOM TERMINAL	1	C7025 TM03	32401846E4	CONTACT:30u" AU MIN; SOLDER TAIL:100u" MATTE TIN MIN;
6	TOP TERMINAL	1	C7025 TM03	32401845E4	CONTACT:30u" AU MIN; SOLDER TAIL:100u" MATTE TIN MIN;
5	OUTER SHELL	1	SUS304-1/2H	3240191OG3	SOLDER NICKEL: 50U" MIN
4	MAIN SHELL	1	SUS304-1/2H	32401849G3	SOLDER NICKEL: 50U" MIN
3	GND SHEET	1	SUS301-EH	32401847A6	SOLDER NICKEL: 50U" MIN
2	EMC	2	SUS304-1/2H	32401848A6	SOLDER NICKEL: 50U" MIN
1	MAIN HOUSING	1	PA46	8240012002A	BLACK

BILL OF MATERIAL

GENERAL	TOLERANCE	FILE.NO.	C12401824	PART.NO.	12401824E412A	DRAWN	Allan.Lai	MATERIAL		SCALE	1:1
x.±0.50	x. °± 5 °	REV.	A	TITLE	USB TYPE C CONNECTOR RIGHT ANGLE DUAL ROW SMT	CHECKED	Weison.lu	DATE	08/29/17	UNIT	mm
.x±0.38	.x °± 2 °	SIZE									
.xx±0.25	.xx± 1 °	A4		SHEET	1 OF 2	APPROVED	Tom	Amphenol Shouhmin Industry			