THIS DRAWING IS UNPUBLISHED. RELEASED FOR PUBLICATION 20
© COPYRIGHT 2020 TE Connectivity. All Rights Reserved. ALL RIGHTS RESERVED.

LOC	DIST
-	-

REVISIONS

P	LTR	DESCRIPTION	DATE	DWN	APVD
	A	RELEASE TO PRODUCTION	22JUN2022	SS	PP

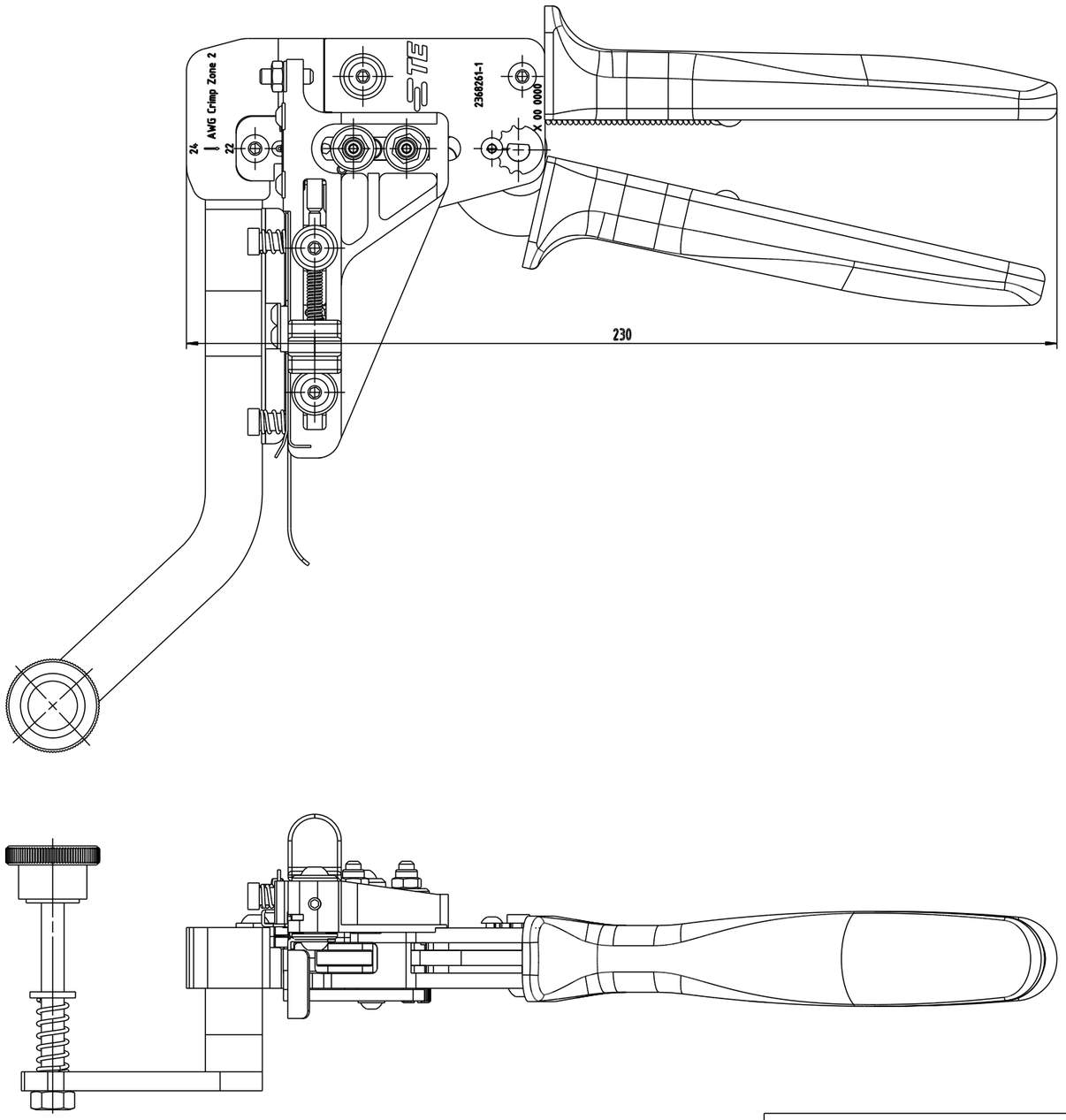

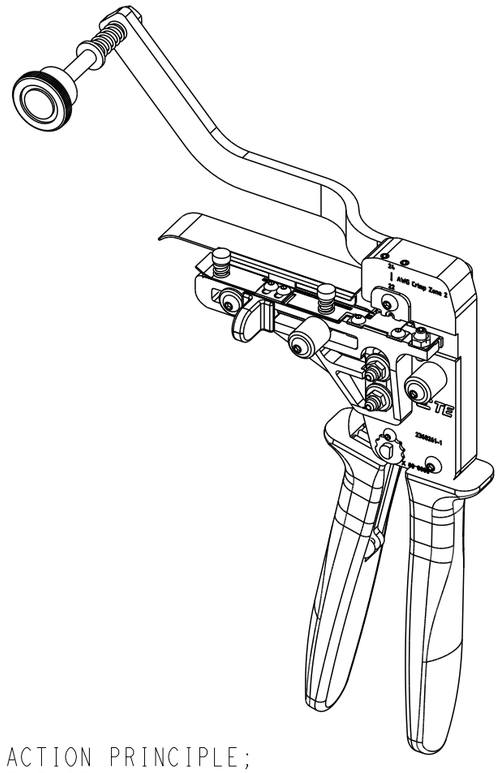

NOTES:

1. STRAIGHT ACTION PRINCIPLE;
2. RATCHED RELEASE;
3. SIMPLE PRESSURE ADJUSTMENT WITH LOCKING DEVICE;
4. FEEDING AND CUTTING DEVICE
5. PRECISELY GROUND PROFILES;
6. ERGONOMIC SOFT GRIPS, COLOUR TRAFFIC BLUE (RAL 5017);
7. FULLY RECYCLABLE;
8. APPLICATION RANGE: T1 INDUSTRIAL CONTACTS;
9. CROSS SECTION RANGE: AWG 24-22
10. REEL WITH CONTACTS (500 PCS) IS INCLUDED, (NOT SHOWN IN PICTURES)

PARTNUMBER: 2368261-1

THIS DRAWING IS A CONTROLLED DOCUMENT.

DIMENSIONS: mm

TOLERANCES UNLESS OTHERWISE SPECIFIED:

0 PLC	±-
1 PLC	±0.1
2 PLC	±0.01
3 PLC	±0.001
4 PLC	±0.0001
ANGLES	±-

MATERIAL -

FINISH -

DWN S.SHARMA 15JUN2022
CHK P.POORTER 21JUN2022
APVD J.DE BRUIJN 22JUN2022
PRODUCT SPEC -
APPLICATION SPEC -
WEIGHT -

TE Connectivity

NAME SPE T1 MANUAL CRIMP TOOL AWG 24-22

SIZE	CAGE CODE	DRAWING NO	RESTRICTED TO
A3	00779	C-2368261	-

CUSTOMER DRAWING

SCALE NTS SHEET 1 OF 1 REV A