Feb.1.2023 Copyright 2023 HIROSE ELECTRIC CO., LTD. All Rights Reserved.
In case of consideration for using Automotive equipment / device which demand high reliability, kindly contact our sales window correspondents.

| | COUNT | DESCRIPTION OF REVISIONS | BY | CHKD | DATE | | COUNT | DESCRIPTION OF REVISIONS | BY | CHKD | DATE |
|---|---|---|---|---|---|---|---|---|---|---|---|
| △ | | | | | . . | △ | | | | | . . |
| △ | | | | | . . | △ | | | | | . . |
| △ | | | | | . . | △ | | | | | . . |

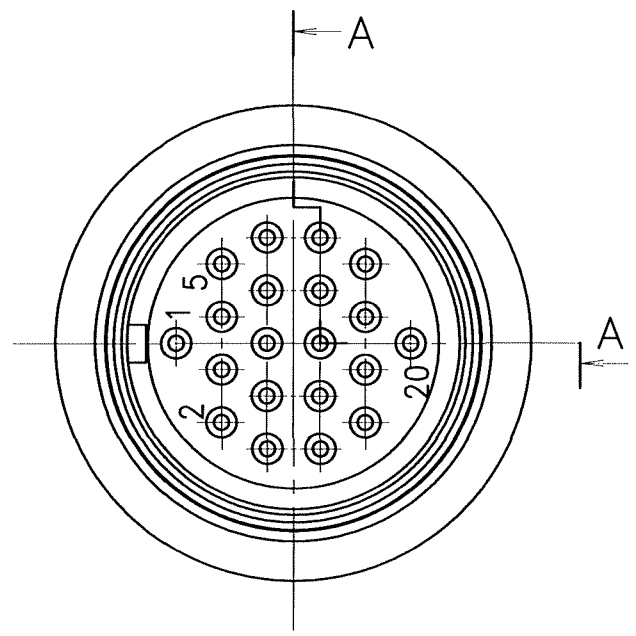


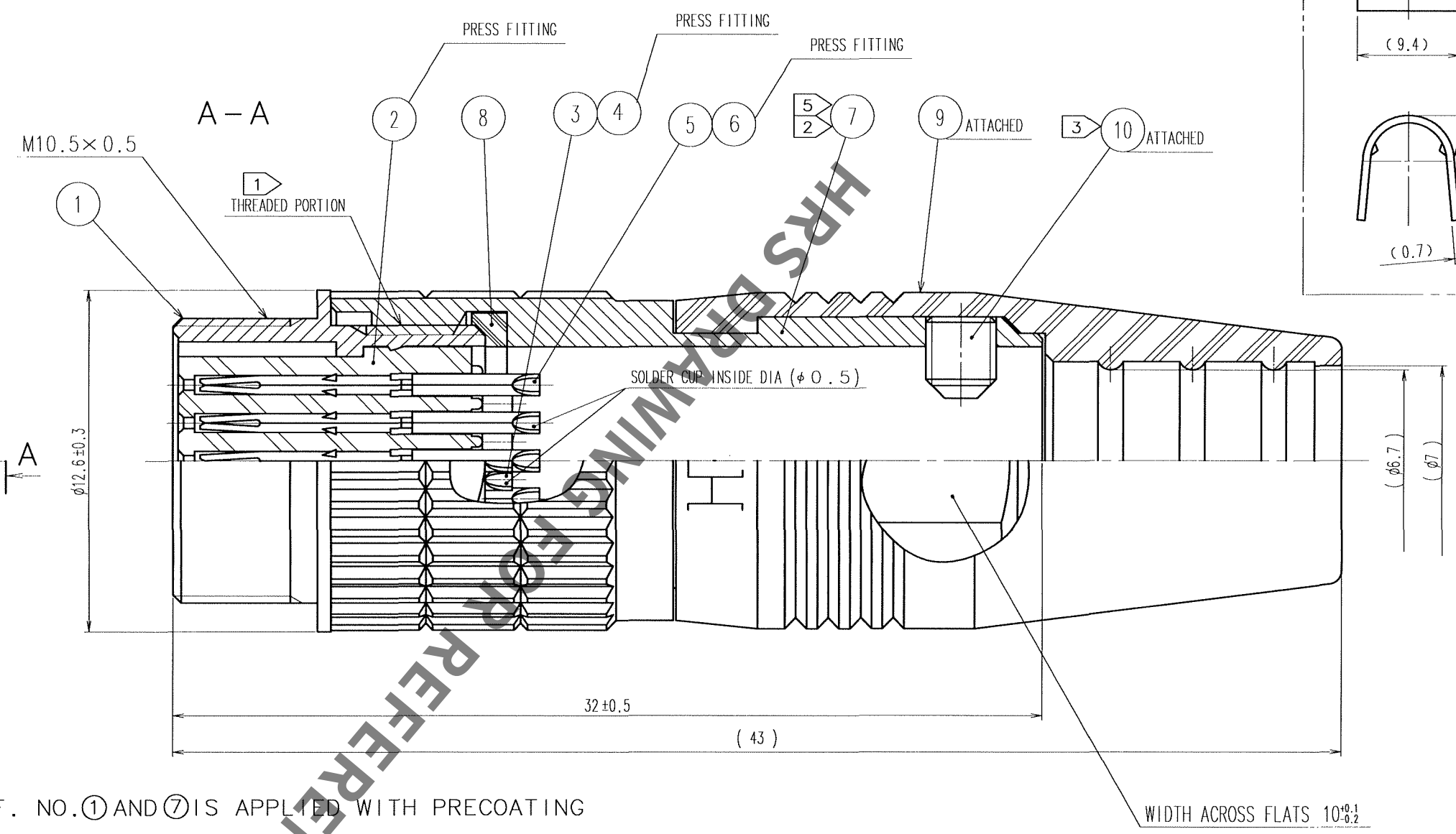


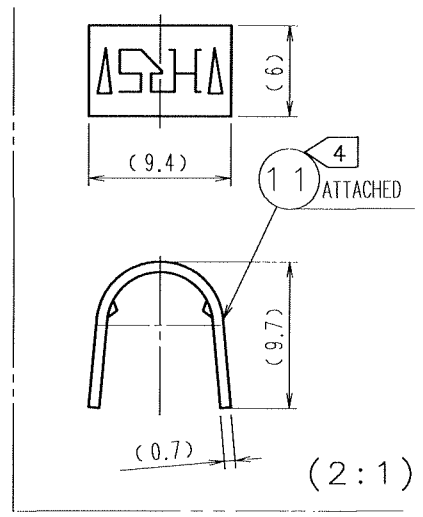


NOTE 1 THREAD PORTION OF REF. NO.① AND ⑦ IS APPLIED WITH PRECOATING TO PREVENT LOOSENESS.
HOWEVER THE ADHESIVE EFFCTIVENESS IS DECREASED WHEN REUSED.
THEREFORE, TREAD PORTION IS RECOMMENDED TO COAT WITH LOCTITE 271 MANUFACTURED BY HENKEL JAPAN OR EQUIVALENT.
2 THE RECOMMENDED TIGHTENING TORQUE OF REF. NO.⑦ TO BE 1 N · m.
3 THE TIP OF REF. NO.⑩ SHALL BE FIXED TO THE CONCAVE PORTION WITH REF. NO.⑪ CLAMPED TO THE CABLE.
OPPOSITE SIDE DIMENSION OF A HEXAGON SOCKET OF REF. NO.⑩ IS 1.27mm.
AND THE RECOMMENDED TIGHTENING TORQUE OF REF. NO.⑩ TO BE 0.3 TO 0.4 N · m.
4 MANUAL CRIMPING TOOL OF REF. NO.⑪: HR10A-TC- 02
(THE HOLE DIAMETER FOR CRIMPING : φ 7)
5 ROTATION EXAMPLES OF REF. NO.① AND ⑦ ARE SHOWN.
6 CONTACT AREA : GOLD 0.2μm min.
TERMINAL AREA : GOLD FLASH
UNDER PLATING : NICKEL 2μm min.

| NO. | MATERIAL | FINISH, REMARKS | NO. | MATERIAL | FINISH, REMARKS |
|---|---|---|---|---|---|
| 7 | BRASS | NICKEL PLATING | | | |
| 5, 6 | PHOSPHOR BRONZE | 6 | 11 | BRASS | |
| 3, 4 | PHOSPHOR BRONZE | 6 | 10 | STEEL | NICKEL PLATING JIS B 1177 HEXAGON SOCKET SCREW M2.6×0.45×3 |
| 2 | PPS | (BLACK) UL94V-0 | 9 | EPDM | (BLACK) |
| 1 | ZINC ALLOY | MATTE FINISH NICKEL PLATED | 8 | EPDM | (BLACK) |

| CODE NO.(OLD) | DRAWN | DESIGNED | CHECKED | APPROVED | RELEASED |
|---|---|---|---|---|---|
| CL | H.Kamashima '05·11·25 | H.Kawashima '05·11·25 | T.Okiyama '05·11·25 | M.Sato 05.11.30 | . . |

SCALE 5 : 1
UNITS mm
DRAWING NO. EDC3-048750-73
HRS HIROSE ELECTRIC CO., LTD
PART NO. HR25-9TJ-20S(73)
CODE NO. CL125-0117-2-73
1/1

| TO |
|---|
| R |
| |
| |

HRS DRAWING FOR REFERENCE