© 2022 TE Connectivity. All Rights Reserved.

REVISIONS					
P	LTR	DESCRIPTION	DATE	DWN	APVD
	A	INITIAL RELEASE	02JUL2022	GK	DB

LABEL AND LINER DESIGN

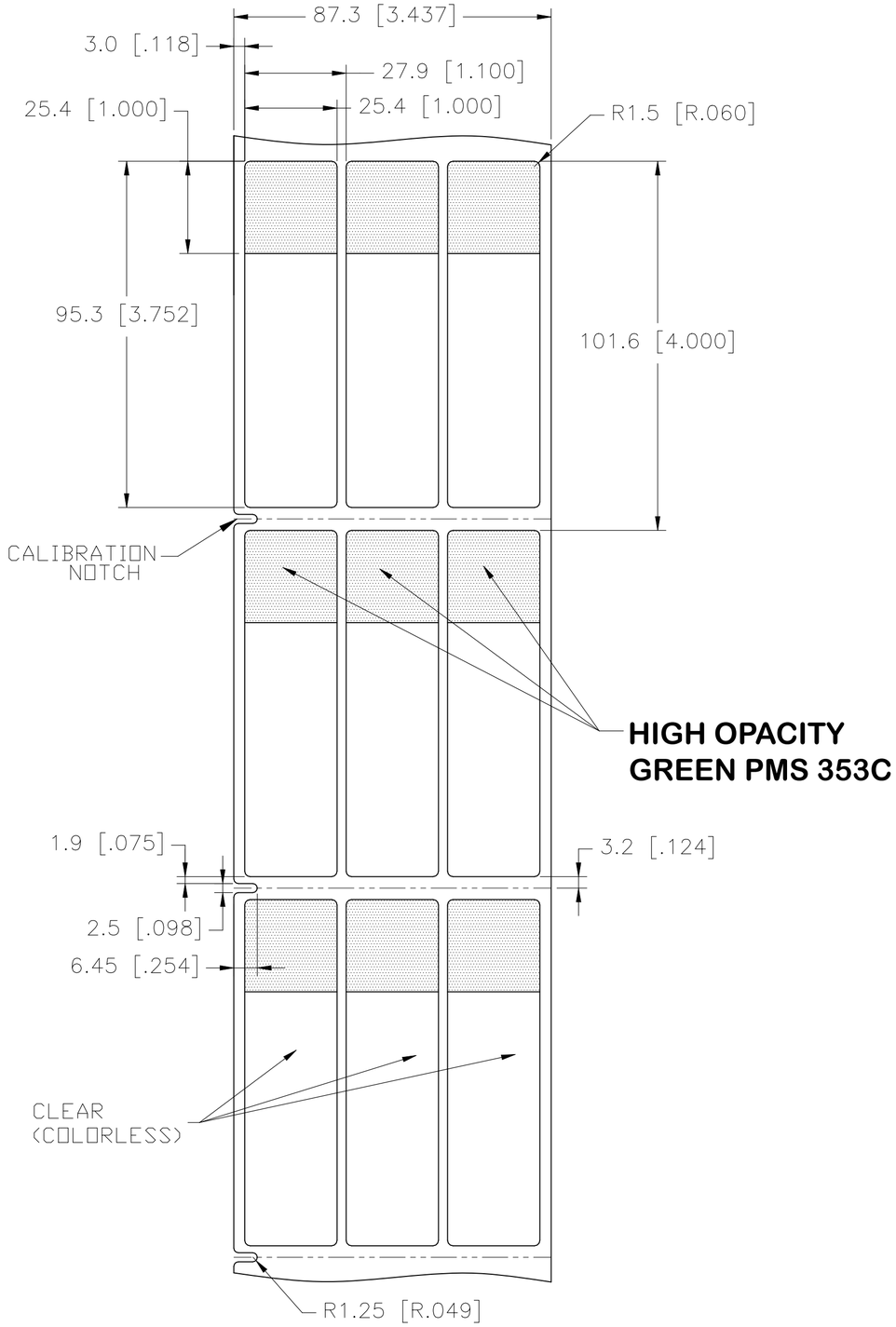

PRESENTATION

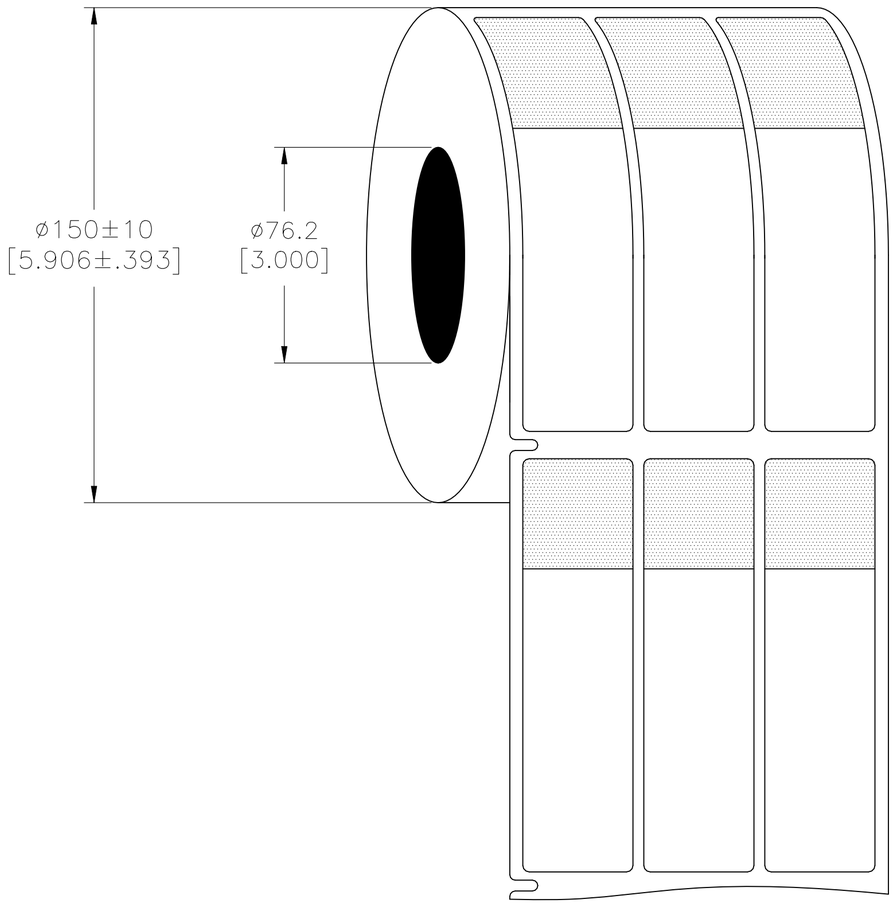

OUTSIDE WOUND
LABEL ACROSS: 3
PER ROLL QTY: 2000

PRINT COLOR CONFORMS TO LABELING STANDARD TIA-606

All dimensions in mm [Inch]

TE PN: 1SET530116R0000

MATERIAL	CLEAR VINYL
ADHESIVE TYPE	ACRYLIC PERMANENT
LINEAR	WHITE KRAFT

TOLERANCES mm [INCH]	
LABEL HEIGHT:	±0.3 [.012]
LABEL WIDTH:	±0.3 [.012]
WEB WIDTH:	±0.8 [.031]
VERTICAL REPEAT:	±0.8 [.031]*
HORIZONTAL REPEAT:	±0.8 [.031]*
PRINT POSITIONING:	±0.8 [.031]*
LEFT MARGIN:	±0.4 [.016]
QUANTITY:	−0 % +2 %
*NON ACCUMULATING	

THIS DRAWING IS A CONTROLLED DOCUMENT.

DIMENSIONS: mm [INCHES]

TOLERANCES UNLESS OTHERWISE SPECIFIED:
0 PLC ± –
1 PLC ± –
2 PLC ± –
3 PLC ± –
4 PLC ± –
ANGLES ± –

MATERIAL: SEE TABLE

FINISH: –

DWN 02JUL2022 GOPALAKRISHNA HV
CHK 02JUL2022 D.BURGAT
APVD 02JUL2022 D.BURGAT
PRODUCT SPEC: TTDS–283
APPLICATION SPEC: —
WEIGHT: 0.336g

TE Connectivity

NAME: SBP EWS LABEL– GREEN
25.4 x 95.3mm [1.00 x 3.75inch]
–

SIZE	CAGE CODE	DRAWING NO	RESTRICTED TO
A2	FB1U7	C-SBPE22–2525–GN–2	—

CUSTOMER DRAWING | SCALE NTS | SHEET 1 OF 1 | REV A

SBPE22–2525–GN–2

1471–9 (1/15)