REVISIONS					
REV	ECO	DESCRIPTION	DATE	BY	APPR
A1	–	RELEASE NEW DRAWING	Oct/08/22	LUCAS	TOMMY

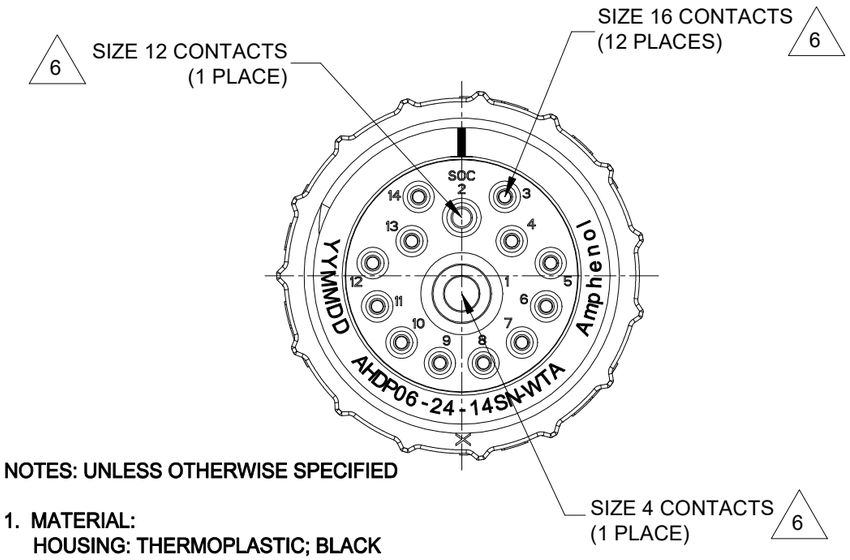

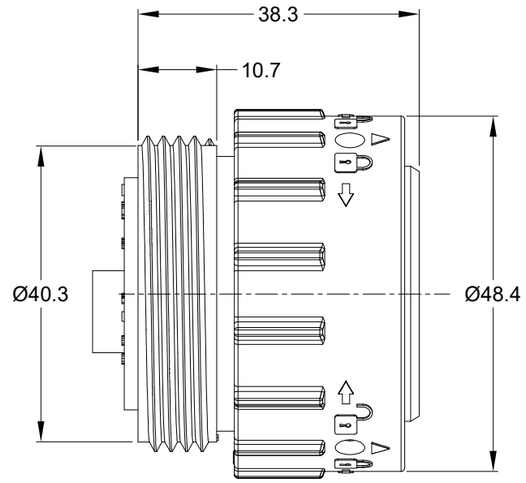

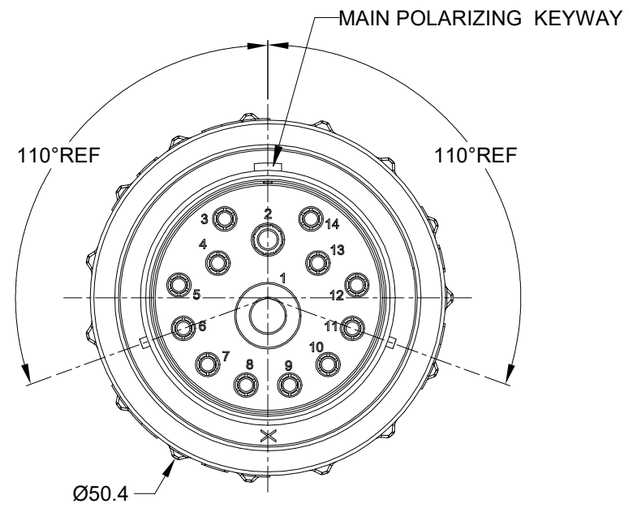

NOTES: UNLESS OTHERWISE SPECIFIED

1. MATERIAL:
   HOUSING: THERMOPLASTIC; BLACK
   SEAL: SILICONE RUBBER

2. MODIFICATIONS: WIDE THREADED ADAPTER(WTA)
   STANDARD DIA. WIRE SEAL.

3. SPECIFICATIONS:
   3.1 OPERATING TEMPERATURE: -55℃ TO +125℃.
   3.2 DIELECTRIC WITHSTANDING VOLTAGE: LESS THAN 2 MILLIAMPS CURRENT LEAKAGE @ 1500 VOLTS AC.
   3.3 INSULATION RESISTANCE: 1000 MEGOHM MIN @ 25℃.
   3.4 MOISTURE RESISTANCE: IP67&IP69K (MATED CONDITION).
   3.5 MATING CYCLE DURABILITY: 100 CYCLES
   3.6 RoHS COMPLIANT

4. MATING PART: AHDP04-24-14P* (* = SEAL TYPE)

5. ALL DIMENSIONS ARE FOR REFERENCE USE ONLY.

6 CONTACT SIZE AND WIRE RANGE:

CONTACT SIZE	MIN. INSUL O.D.	MAX. INSUL O.D.	TYPICAL WIRE RANGE	CURRENT RATING
4	6.63 mm (.261 in)	7.41 mm (.292 in)	6 AWG (16.0-13.0mm²)	100 AMPS
12	3.40 mm (.134 in)	4.32 mm (.170 in)	10-14 AWG (6.0-2.0mm²)	25 AMPS
16	2.50 mm (.100 in)	3.40 mm (.134 in)	14-20 AWG (2.0-0.5mm²)	13 AMPS

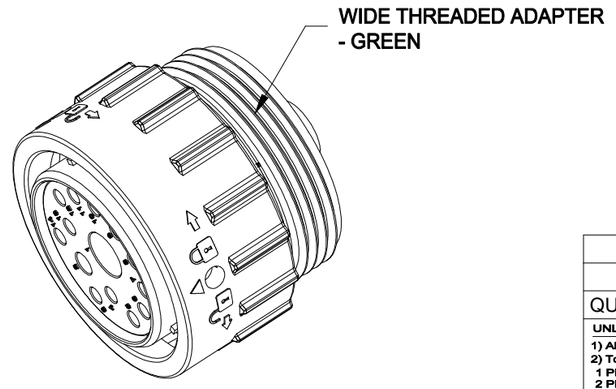

QUANTITY	PART NUMBER	DESCRIPTION	ITEM
	AHDP06-24-14SN-WTA	REF:HDP26-24-14SN-L024	

MATERIALS LIST

UNLESS OTHERWISE SPECIFIED
1) All dimensions are in metric(mm).
2) Tolerances are as follows:
1 PL DEC ±0.30 | Fractions ±1/64
2 PL DEC ±0.15 | Angles ±1°
3 PL DEC ±0.08
3) Note reference = X

MATERIAL SPECIFICATIONS:

PROCESS SPECIFICATIONS:

NEXT ASS'Y:

SIGNATURES		DATE
DRAWN:	LUCAS.CHAI	Oct/08/22
CHECKED:	ORION.LI	Oct/10/22
ENGINEER:		
APPROVAL:	TOMMY.XIE	Oct/14/22
CUSTOMER:		

THIS DRAWING IS SUPPLIED FOR INFORMATION ONLY. DESIGN FEATURES, SPECIFICATIONS AND PERFORMANCE DATA SHOWN HEREON ARE THE PROPERTY OF THE AMPHENOL CORPORATION. NO RIGHTS OF REPRODUCTION ARE IMPLIED. ALL DIMENSIONS ARE SUBJECT TO NORMAL MANUFACTURING VARIATIONS.

Amphenol

Sine Systems - www.amphenol-sine.com
44724 Morley Drive
Clinton Township, MI 48036

PLUG,24-14 POS,SOCKET CONTACT
NORMAL DIA. SEAL, AHDP SERIES

SIZE	TYPE	DWG NO:	REVISION
B	C-	AHDP06-24-14SN-WTA	A1

SCALE: NONE SHEET 1 OF 1

TITLE: PLUG,24-14 POS, SOC CONT.,NORMAL DIA. SEAL, AHDP
DWG NO: AHDP06-24-14SN-WTA
REV: A1
SH: 1
OF: 1