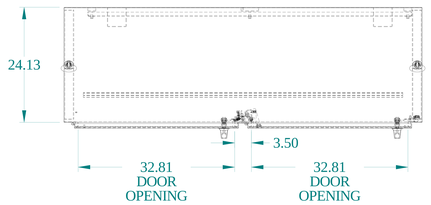

TOP VIEW

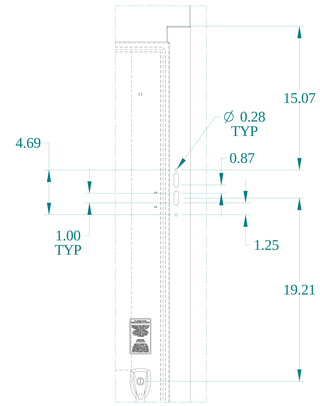

DETAIL Z

ISOMETRIC VIEWS

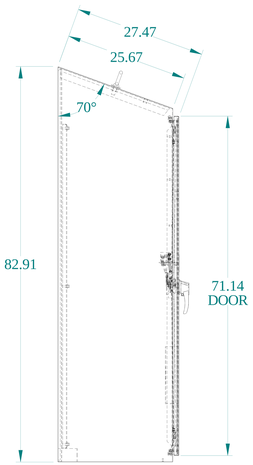

SIDE VIEW

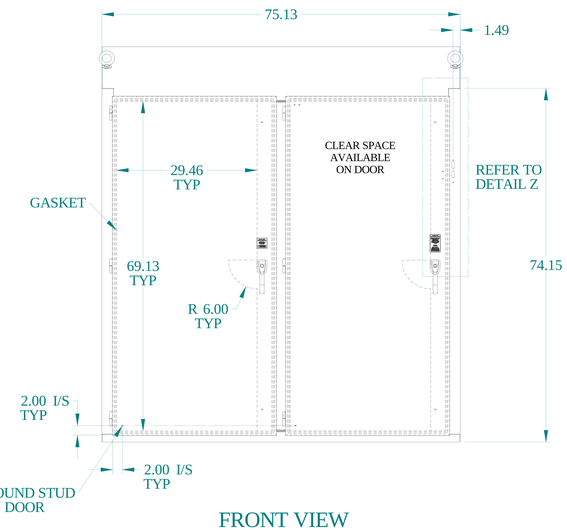

FRONT VIEW

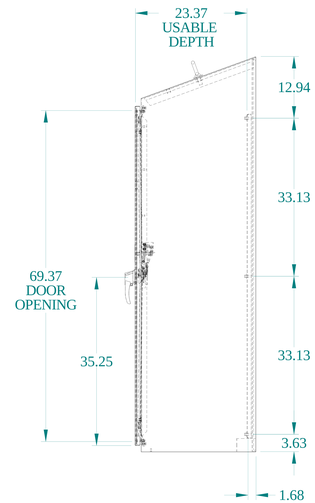

SIDE VIEW

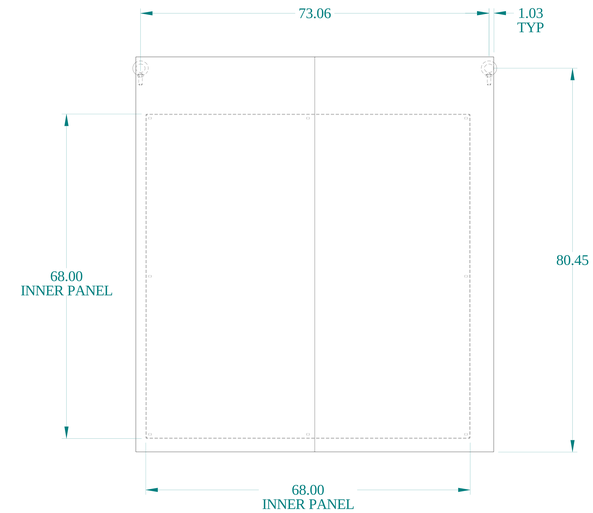

BACK VIEW

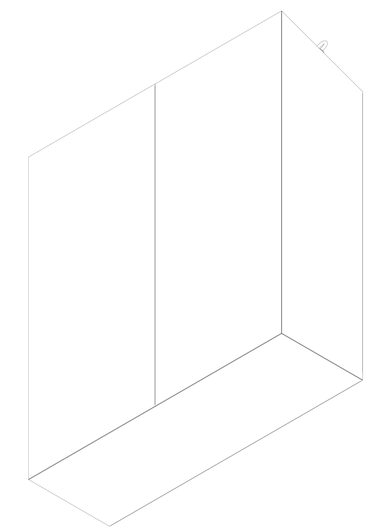

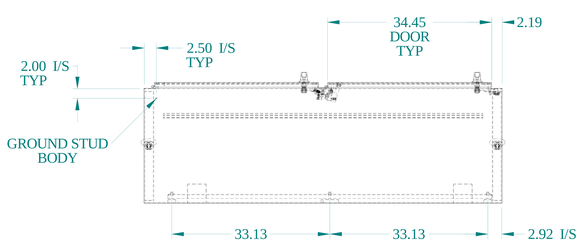

BOTTOM VIEW

HAMMOND MANUFACTURING®

www.hammondmfg.com

Data subject to change without notice.

Part # : 2STFSD747524SS	Date : Dec. 13, 2021

Link:www.hammfg.com/2STFSD747524SS