REV.	DESCRIPTION	DESIGN	APPROVAL	DATE
X	NEW	Hongmei	XL Deng	2018.03.18

Technical requirement 技术参数：

1. Electrical Characteristics Test电气性能检验
   1.1 Products 100% for electrical test.成品100%电性测试.
   1.2 Insulation resistance: No less than 100MΩ of 500V DC/0.4S.
   绝缘阻抗:大于或等于100MΩ 500V DC/0.4S.
   1.3 Dielectric strength 耐电压
   1.3.1 Between two conductors 2500^{+200}_{0}V AC for1.0s Trip-current 1.0mA max.
   导体与导体之间2500^{+200}_{0}V AC /1秒,漏电流1.0mA(max).
   1.3.2 Between conductor and body 2500^{+200}_{0}V AC for 1.0s - Trip current 1.0mA max.
   导体与本体之间2500^{+200}_{0}V AC /1秒,漏电流1.0mA(max).
2. Mechanical Characteristics Test 机械性能检验
   2.1. Withdrawal force 拔出力
   2.1.1 For checking each PIN independently from the standard-gauge below 1.5N(Min) Keep for 3S or more.
   标准量规对连接器插孔单PIN保持力为最小1.5N保持3秒以上.
   2.1.2 For checking Integral withdrawal force 50N(Max) from maximum standard gauge.标准量规(最大值)检查整体拔出力 50N(最大).
3. Finished product conditions 成品状态
   3.1 The attachment plug front show the test mark of "T".
   插头主视面须有测试标志"T".
   3.2 The dimension with "▽" must be control and inspected importantly.
   带"▽"尺寸需重点管控和检验.
   3.3 The dimension with " * " is for safety gauge.
   带" * "尺寸为安规尺寸.
4. Standards 标准
   4.1 The cord shall comply with AS/NZS 3191.线材符合AS/NZS 3191
   4.2 The molded plug shall comply with AS/NZS 3112.插头符合AS/NZS 3112.
   4.3 The molded connector shall comply with IEC60320-1.连接器符合IEC60320-1
5. Environmental requirement环保要求
   5.1 Material and product comply with Doc No."QW-Q-043"《material- and product- of restricted substance control specification.
   物料及成品必须符合QW-Q-043《材料与成品限用物质管理规范》.

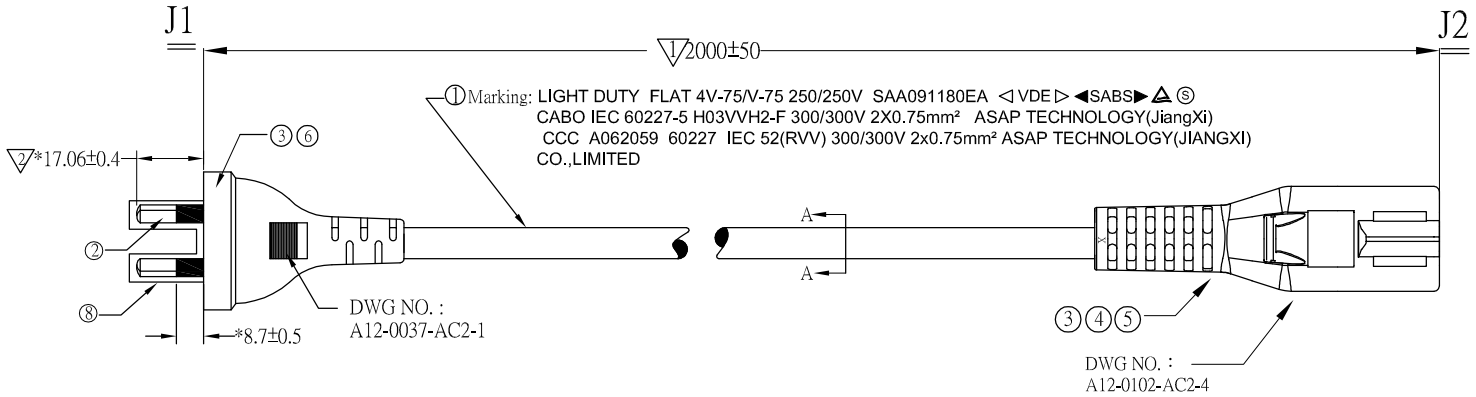

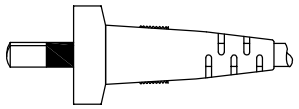

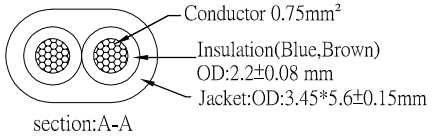

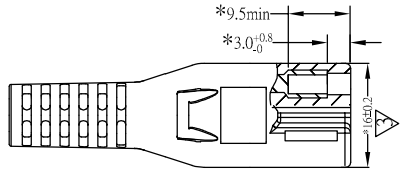

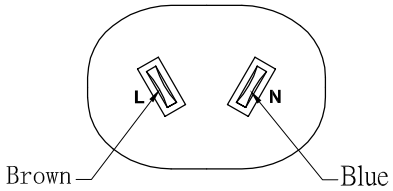

Marking details J1 see the DWG NO.A12-0037-AC2-1
(J1端标志详见DWG NO.A12-0037-AC2-1)

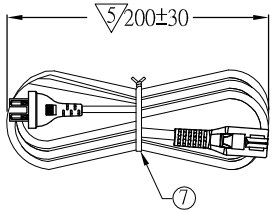

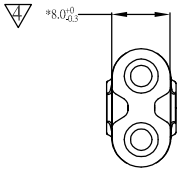

Marking details J2 see the DWG NO.A12-0102-AC2-4
(J2端标志详见DWG NO.A12-0102-AC2-4)

ITEM	NAME	DESCRIPTION	Q'TY	UNIT
⑧	SLEEVE	Protecting cover for plug pins.	1	pcs
⑦	TIE	Black PE tie hanking cord and meeting RoHS.	1	pcs
⑥	PLASITC	55P Black PVC pellets meeting RoHS and UL94 V-0.	NA	g
⑤	HOUSING	Housing for C7 connector, PBT+30%GF UL94V-0 Black.	1	pcs
④	TERMINAL	O type terminal 0.4*26.4*13.0,Phosphor bronze.	2	pcs
③	HOLDER	Holder for SAA plug 10A, PBT material, white.	1	pcs
②	BLADE	Blade of SAA plug , nickel-plated copper.	2	pcs
①	POWER CORD	H03VVH2-F 2x0.75mm² OD:3.45x5.6±0.15mm Black .	NA	mm

X.±	X.°±
.X±	.X°±
.XX±	.XX°±
.XXX±	.XXX°±
UNITS	mm

THESE DRAWINGS AND SPECIFICATIONS ARE THE PROPERTY OF LUXSHARE-ICT AND SHALL NOT BE REPRODUCED, COPIED OR CUED IN ANY MANNER WITHOUT THE PRIOR WRITTEN CONSENT OF LUXSHARE-ICT

Part number CA-C8-AU

APPD: XL Deng

CHKD: Guangren Ouyang

DRAW: Hongmei Hu

TIGER Power Supplies

TITLE: SAA 2P TO C7 L2.0M Black

DWG NO: RDN18030157-006

SCALE	SHEET	REV.
NONE	1/1	X

REV.	DESCRIPTION	DESIGN	APPROVAL	DATE
A	NEW	JING LIU	QS LIU	2017.9.27

NOTE:

Technical Requirement:The dimension with" * " is for safety standard.

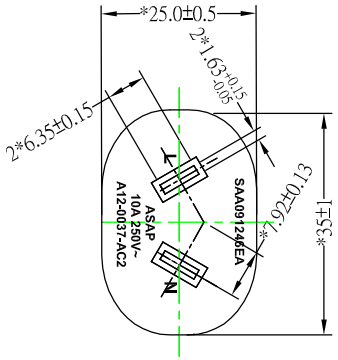

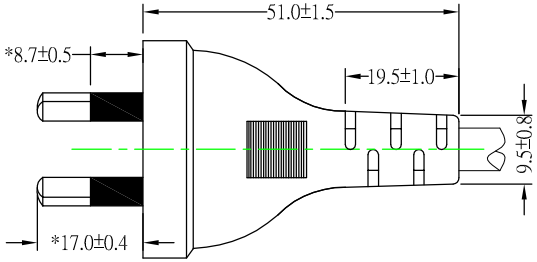

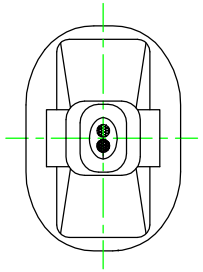

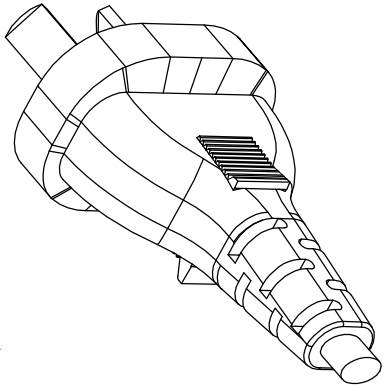

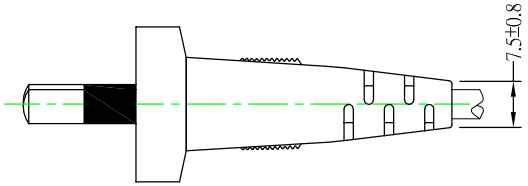

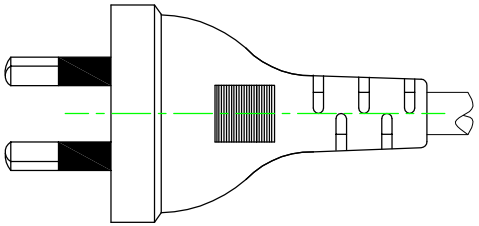

1	H03VVH2-F 2x0.75 OD:3.45*5.6	Flat Cable
NO.	SPECIFICATION	Remark

X. :±0.6	X.° :±1°	DWG TYPE: PRODUCT DRAWING	TIGER Power Supplies Part number CA-C8-AU
.X :±0.4	.X° :±0.6°		
.XX:±0.10	.XX°:±0.3°	MOUID NO: AC-P0037-x	TITLE: SAA Two PIN PLUG
UNITS	mm		
THESE DRAWINGS AND SPECIFICATIONS ARE THE PROPERTY OF LUXSHARE-ICT AND SHALL NOT BE REPRODUCED, COPIED OR CUED IN ANY MANNER WITHOUT THE PRIOR WRITTEN CONSENT OF LUXSHARE-ICT		APPD: 欧阳光仁	DWG NO: A12-0037-AC2-1
		CHKD: 刘秋顺	SCALE / SHEET / REV.
		DRAW: 刘景	NONE / 1/1 / A

REV.	DESCRIPTION	DESIGN	APPROVAL	DATE
A	NEW	JING LIU	QS LIU	2017.10.06

NOTE:
Technical Requirement:The dimension with" * " is for safety standard.

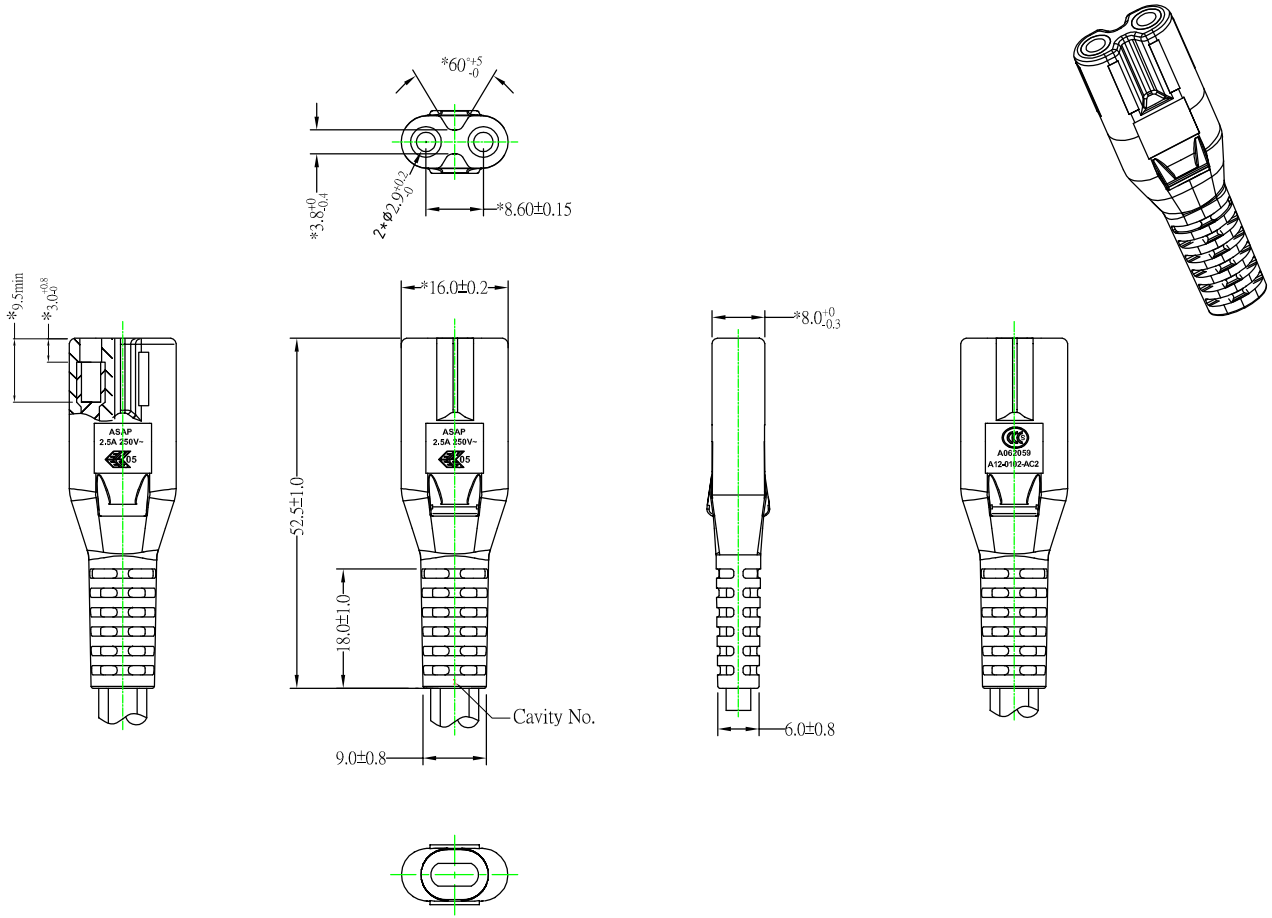

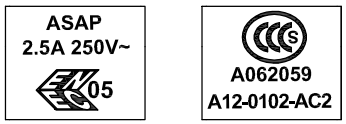

Marking

1	H03VVH2-F 2X0.75 OD:3.45x5.6mm	Flat Cable
NO.	SPECIFICATION	Remark

X. :±0.6	X.° :±1°	DWG TYPE: PRODUCT DRAWING	TIGER Power Supplies Part number CA-C8-AU
.X :±0.4	.X° :±0.6°		
.XX:±0.10	.XX°:±0.3°	MOUID NO: AC-C0102-x	TITLE: VDE C7 CONNECTOR
UNITS	mm		
THESE DRAWINGS AND SPECIFICATIONS ARE THE PROPERTY OF LUXSHARE-ICT AND SHALL NOT BE REPRODUCED, COPIED OR CUED IN ANY MANNER WITHOUT THE PRIOR WRITTEN CONSENT OF LUXSHARE-ICT		APPD: 欧阳光仁	DWG NO: A12-0102-AC2-4
		CHKD: 刘秋顺	SCALE: NONE / SHEET: 1/1 / REV.: A
		DRAW: 刘景	

Item		Specification
Construction item		ComponentA
Conductor	Cross section	0.75mm^2
	Material	Bare Copper
	Size	38/0.16±0.008mm
Insulation	Material	PVC
	Thickness	0.5mm Ref
	O.D.	2.2±0.08 mm
	Insulation NO.	2(Brn,Blue)
Layer	Direction	--
	Diameter	--
Jacket	Material	PVC
	Diameter	3.45*5.6±0.15 mm
	Color	Black
	Extrusion	Solid
	Surface	Plane
Marking	Marking color	White
	Marking Content	LIGHT DUTY FLAT 4V-75/V-75 250/250V SAA091180EA ◁VDE▷ ◀SABS▶ ▲Ⓢ CABO IEC 60227-5 H03VVH2-F 300/300V 2x0.75mm² ASAP TECHNOLOGY(JiangXi) CCC A062059 60227 IEC 52(RVV) 300/300V 2x0.75mm² ASAP TECHNOLOGY(JIANGXI) CO.,LIMITED

Electric Characters	
1.Voltage rating :300/300V	2.2 The cable : 2KV AC/5min at 20±5℃ in the water
2.Dielectric strength : AC-500V/0.15 sec MIN	3.Insulation resistance : 0.010MΩ/km at 70℃ min.
2.1 Insulation：1.5KV AC/5min at 20±5℃ in the water	4.Conductor resistance: 26Ω/km at 20℃ max.

Physical Characters:	
1.Flame test of cable: no spreading combustion test	3.Tensil strength test are before aging :
1.1 The interval Which the scorch part and the bottom of	3.1 Insulation：≧10N/mm^2
top clamp ：≧50mm	3.2 Sheath : ≧10N/mm^2
2.Structure inspection：	4.Tensil strength test are after aging：
2.1 Insulation：0.5mm min. average thickness ,	4.1 Insulation：The changes of the before and after aging is ±20%
0.35mm min. at any point	4.2 Sheath: The changes of the before and after aging is ±20%
2.2 Sheath : 0.6mm min. average thickness,	5.Elongation before aging：
0.44mm min. at any point	5.1 Insulation：≧150%
	5.2 Sheath : ≧150%
	6. Elongation after aging：
	6.1 Insulation：The changes of the before and after aging is ±20%

REV.	DESCRIPTION	DATE
A	NEW	2013.07.25

6.2 Sheath: The changes of the before and after aging is ±20%	9.Low temperature bend test;
7. Weightlessness test：	9.1 Insulation：No any chasm
7.1 Insulation：≦2.0mg/cm^2	9.2 Sheath: No any chasm
7.2 Sheath: ≦2.0mg/cm^2	10.Low temperature attack test of the cable:
8. High temperature pressure test：	10.1 No any chasm at -15℃ 16H LOAD 200g.
8.1 Insulation：impress depth≦	11.Thermal shock test ：
50% average thickness of Insulation	11.1 Insulation：No any chasm
8.2 Sheath: impress depth≦	11.2 Sheath: No any chasm
50% average thickness of Sheath	12.Circumnutate test of The cable:
	12.1 No turnoff and short circuit

Harmful material and process control, please follow DOC NO "QW-Q-043"

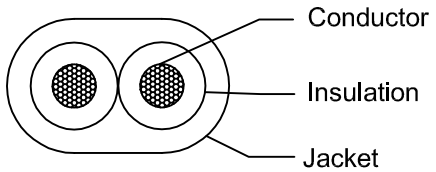

34.64±4%
單重(G/M)

X.± *	X.°±	UNITS	mm
.X± *	.X°±		
.XX± *	.XX°±	MATL	
.XXX± *	.XXX°±		
FINISH			
Q'TY			

THESE DRAWINGS AND SPECIFICATIONS ARE THE PROPERTY OF ASAP TECHNOLOGY(JIANGXI)CO., LIMITED AND SHALL NOT BE REPRODUCED,COPIED OR CUED IN ANY MANNER WITHOUT THE PRIOR WRITTEN CONSENT OF ASAP TECHNOLOGY(JIANGXI)CO., LIMITED.

NAME(INTENDED USE)
SAA H03VVH2-F/RVV(52) 2*0.75MM

TIGER Power Supplies Part number CA-C8-AU

TITLE: SAA H03VVH2-F/RVV(52) 2*0.75MM^2
3.45*5.6±0.15 mm Black

APPD: 杨保根
CHKD: 欧阳光仁
DR: 刘波

DWG NO:
00A-222100-001R

SCALE	SHEET	REV.
NONE	1/1	A