REV.	DESCRIPTION	DESIGN	APPROVAL	DATE
A	NEW	Hongmei	XL DENG	2018.06.08
A2	ECN19-0000033685(修改 UL插头L/N极插片外露尺寸)	Hongmei	Hongjiang Zhu	2019.08.19
B	500000034632(remove "S" from CCC mark)	Hongmei	Hongjiang	2020.08.04

Technical requirement 技术参数：

1. Electrical Characteristics Test电气性能检验
   1.1 Products 100% for electrical test.成品100%电性测试.
   1.2 Insulation resistance: No less than 100MΩ of 500V DC/0.4S.
   绝缘阻抗:大于或等于100MΩ 500V DC/0.4S.
   1.3 Dielectric strength 耐电压
   1.3.1 Between two conductors 1500^{+200}_{-0}V AC for1.0s Trip-current 1.0mA max.
   导体与导体之间1500^{+200}_{-0}V AC /1秒,漏电流1.0mA(max).
   1.3.2 Between conductor and body 2500^{+200}_{-0}V AC for 1.0s - Trip current 1.0mA max.
   导体与本体之间2500^{+200}_{-0}V AC /1秒,漏电流1.0mA(max).
2. Mechanical Characteristics Test 机械性能检验
   2.1. Withdrawal force 拔出力
   2.1.1 For checking each PIN independently from the standard-gauge below 1.5N(Min) Keep for 3S or more.
   标准量规对连接器插孔单PIN保持力为最小1.5N保持3秒以上.
   2.1.2 For checking Integral withdrawal force 50N(Max) from maximum standard gauge.标准量规(最大值)检查整体拔出力50N(最大).
3. Finished product conditions 成品状态
   3.1 The attachment plug front show the test mark of "T".
   插头主视面须有测试标志"T".
   3.2 The dimension with "▽" must be control and inspected importantly.
   带"▽"尺寸需重点管控和检验.
   3.2 The dimension with " * " is required by safty standard .
   带" * "尺寸为安规尺寸.
4. Standards 标准
   4.1 The cord shall comply with UL62.线材符合UL62
   4.2 The molded plug shall comply with UL817.插头符合UL 817.
   4.3 The molded connector shall comply with UL817,IEC60320-1.
   连接器符合UL817,IEC60320-1
5. Environmental requirement环保要求
   5.1 Material and product comply with Doc No."QW-Q-043"《material- and product- of restricted substance control specification.
   物料及成品必须符合QW-Q-043《材料与成品限用物质管理规范》.

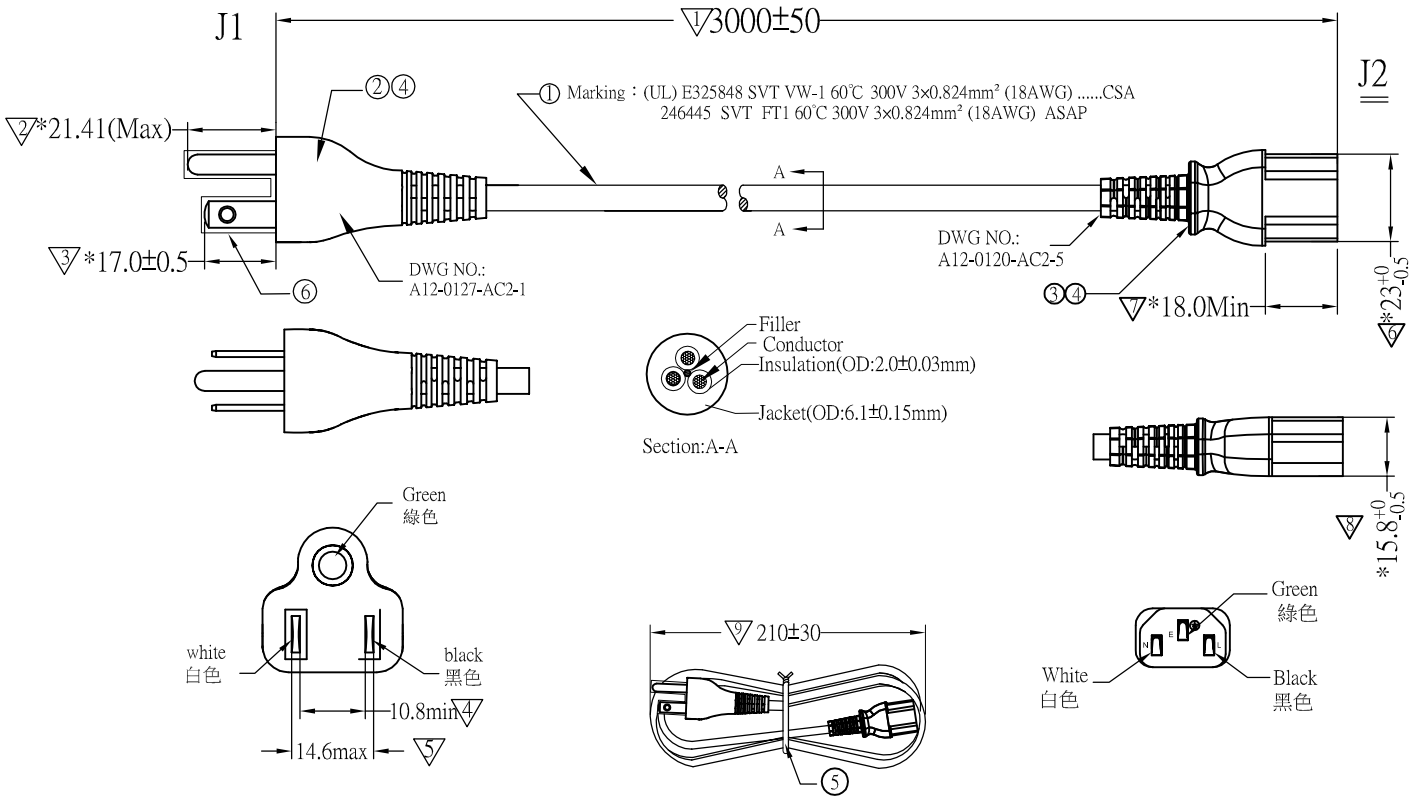

wiring method接線方式：

J1	cord	J2
E	Green 绿色	E
L	Black 黑色	L
N	White 白色	N

ITEM	NAME	DESCRIPION	UNIT	Q'TY
⑥	SLEEVE	Protecting sleeve for plug.	pcs	1
⑤	TIE	Black PE tie, complying with RoHS.	pcs	1
④	PVC PELLET	55P black PVC pellets meeting RoHS and UL94 V-0.	g	
③	HOLDER	Holder of C13,PBT material, white,copper.	pcs	1
②	INSERT	UL two poles insert with earthing,PBT 94V-0,black,copper,nickel-plated.	pcs	1
①	POWER CORD	SVT 18AWG/3C 60℃ black	mm	NA

X.±	X.°±	UNITS	
.X±	.X°±	mm	
.XX±	.XX°±	MATL	
.XXX±	.XXX°±		
		FINISH	
		Q'TY	

THESE DRAWINGS AND SPECIFICATIONS ARE THE PROPERTY OF ASAP TECHNOLOGY(JIANGXI)CO., LIMITED AND SHALL NOT BE REPRODUCED,COPIED OR CUED IN ANY MANNER WITHOUT THE PRIOR WRITTEN CONSENT OF ASAP TECHNOLOGY(JIANGXI)CO., LIMITED.

APPD: Hongjiang Zhu
CHKD: Guangren Ouyang
DR: Hongmei Hu

Part CA-C13-US-3M

TIGER Power Supplies

TITLE: UL 3P to C13 L3M Black

DWG NO: RDN18050483-015

SCALE	SHEET	REV.
NONE	1/1	B

REV.	DESCRIPTION	DESIGN	APPROVAL	DATE
A	NEW	JING LIU	QS LIU	2017.9.27

NOTE:
Technical Requirement:The dimension with" * " is for safety standard.

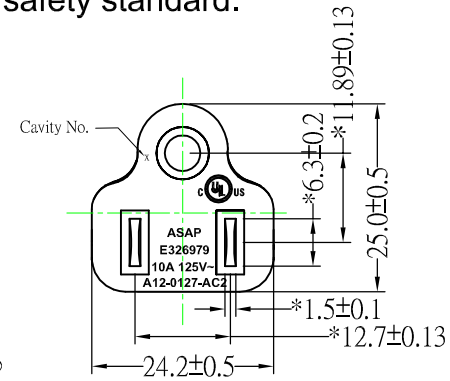

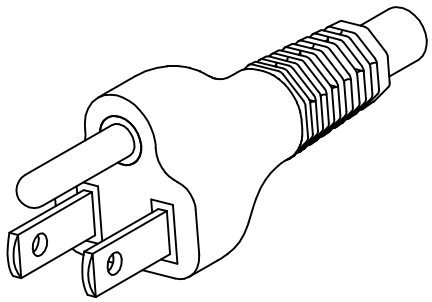

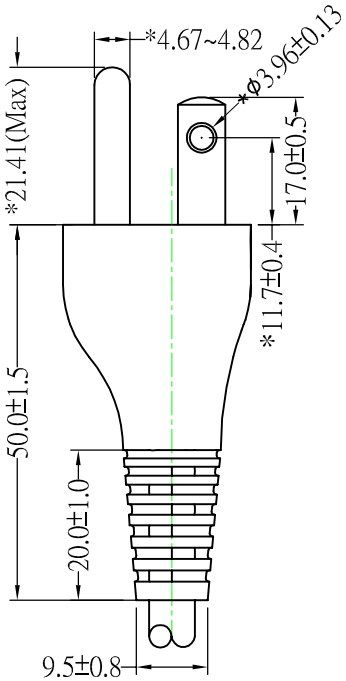

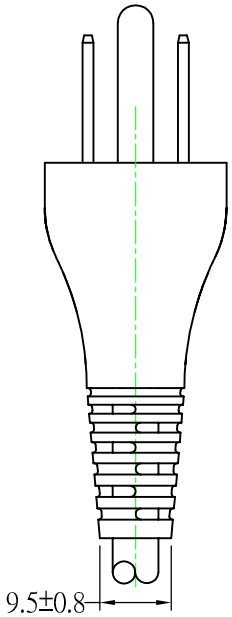

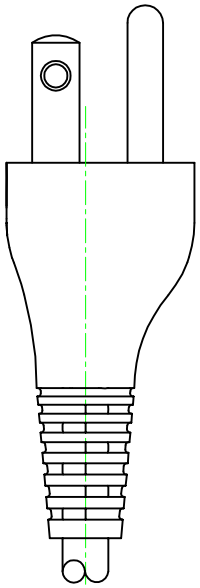

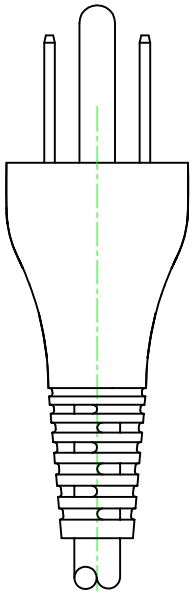

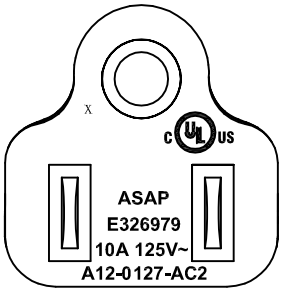

Marking

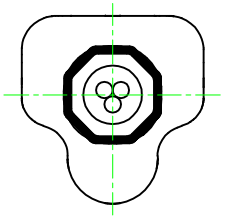

1	SVT 18AWGX3C OD:6.1	Round Cable
NO.	SPECIFICATION	Remark

X. :±0.6	X.° :±1°	DWG TYPE: PRODUCT DRAWING	Part CA-C13-US-3M TIGER Power Supplies
.X :±0.4	.X° :±0.6°		
.XX:±0.10	.XX°:±0.3°	MOUID NO: AC-P0127-x	TITLE: UL 5-15P Three Pin PLUG
UNITS	mm		
THESE DRAWINGS AND SPECIFICATIONS ARE THE PROPERTY OF LUXSHARE-ICT AND SHALL NOT BE REPRODUCED, COPIED OR CUED IN ANY MANNER WITHOUT THE PRIOR WRITTEN CONSENT OF LUXSHARE-ICT		APPD: 欧阳光仁	DWG NO: A12-0127-AC2-1
		CHKD: 刘秋顺	
		DRAW: 刘景	SCALE: NONE / SHEET: 1/1 / REV.: A

NOTE:
Technical Requirement:The dimension with" * " is for safety standard.

REV.	DESCRIPTION	DESIGN	APPROVAL	DATE
A	NEW	JING LIU	QS LIU	2017.9.27
B	CCC去掉"S"标志	FG HU	QS LIU	2020.04.16

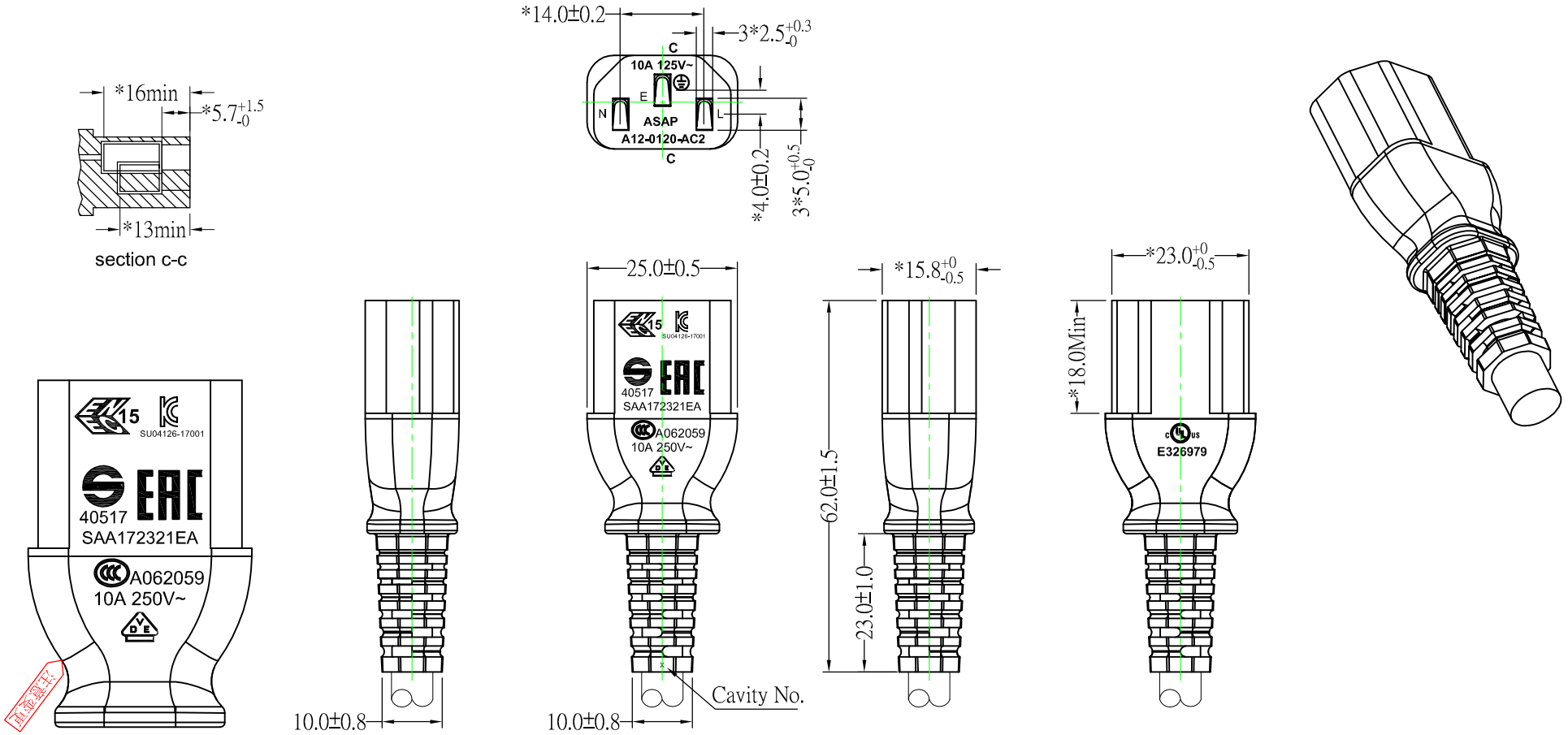

Marking

1	SVT 18AWG*3C □6.1	Round Cable
NO.	SPECIFICATION	Remark

X. :±0.6	X.° :±1°	DWG TYPE: PRODUCT DRAWING	Part CA-C13-US-3M TIGER Power Supplies
.X :±0.4	.X° :±0.6°		
.XX:±0.10	.XX°:±0.3°	MOUID NO: AC-C0120-x	TITLE: CCC/VDE/UL C13 Connector
UNITS	mm		
THESE DRAWINGS AND SPECIFICATIONS ARE THE PROPERTY OF LUXSHARE-ICT AND SHALL NOT BE REPRODUCED, COPIED OR CUED IN ANY MANNER WITHOUT THE PRIOR WRITTEN CONSENT OF LUXSHARE-ICT		APPD: 欧阳光仁	DWG NO: A12-0120-AC2-5
		CHKD: 刘秋顺	
		DRAW: 胡方刚	SCALE: NONE / SHEET: 1/1 / REV.: B

Item		Specification
Construction item		ComponentA
Conductor	AWG	18#(41/34#)
	Material	Bare Copper
	Size	41/0.158±0.008BC
Insulation	Material	PVC
	Min AverageThickness	0.38mm
	Min at any Point Thickness	0.33mm
	O.D.	2.0±0.08 mm
	Color	Black,White,Green
Layer	Direction	Right (S)
	Filler	PP-Tape
	Diameter	4.3mmRef
WRap	Material	---
	Overlap Rate	---
	Direction	---
Jacket	Material	PVC
	Diameter	6.1±0.20mm
	Min AverageThickness	0.76mm
	Min at any Point Thickness	0.69mm
	Color	Black
	Exrtusion	Solid
	Surface	Plane
Marking	Marking Color	White
	Marking Content	(UL) E325848 SVT VW-1 60℃ 300V 3×0.824mm^2(18AWG).....CSA 246445 SVT FT1 60℃ 300V 3×0.824mm^2(18AWG) ASAP

Electric Characters	Physical Characters:
1.Voltage rating :300V	1.Flame test of cable : VW-1
2.Temperature rating :60℃	2.Tensil strength test are before aging :
3.Spark test : AC-3000V/0.15 sec MIN	＞1.05kgf/mm^2 (Insulation,Jacket)
4.Dielectric strength : AC-1500V/MIN MIN	3.Tensil strength test are after aging:
5.Insulation resistance:	＞85%Tensil strength before aging (Insulation,Jacket)
PVC DC-500V 0.762MΩ.KM MIN at 20℃	4.Elongation before aging：＞100% (Insulation,Jacket)
6.Conductor resistance :	5. Elongation after aging:
18AWG 22.4Ω/KM MAX at 20℃	＞65%Tensil strength before aging(Insulation)
	＞45%Tensil strength before aging(Jacket)

REV.	DESCRIPTION	DATE
A	NEW	2013.07.24

Environmental Requirement : harmful material and process control, please follow DOC NO "QW-Q-043"

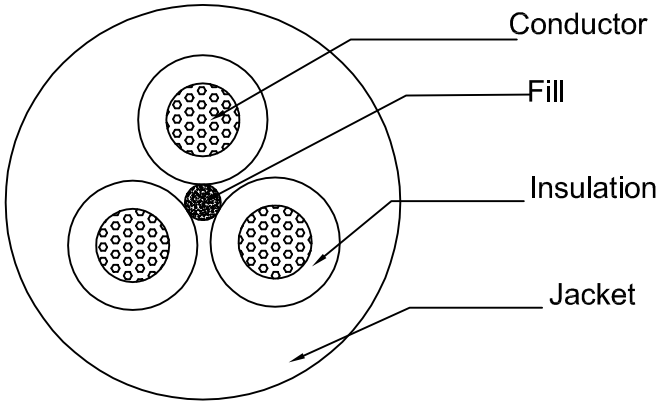

58.37±4%
單重(G/M)

X.± *	X.°±	UNITS mm	NAME(INTENDED USE) SVT 18#41/0.158BC*3C+F
.X± *	.X°±		
.XX± *	.XX°±	MATL	PART NO. 00A-813200-001R
.XXX± *	.XXX°±		
THESE DRAWINGS AND SPECIFICATIONS ARE THE PROPERTY OF ASAP TECHNOLOGY(JIANGXI)CO., LIMITED AND SHALL NOT BE REPRODUCED,COPIED OR CUED IN ANY MANNER WITHOUT THE PRIOR WRITTEN CONSENT OF ASAP TECHNOLOGY(JIANGXI)CO., LIMITED.		FINISH	APPD: 杨保根
			CHKD: 欧阳光仁
		Q'TY	DR: 刘波

Part CA-C13-US-3M

TIGER Power Supplies

TITLE: SVT 18#41/0.158BC*3C+F
BLACK O.D.:6.1±0.20mm

DWG NO: 00A-813200-001R

SCALE	SHEET	REV.
NONE	1/1	A