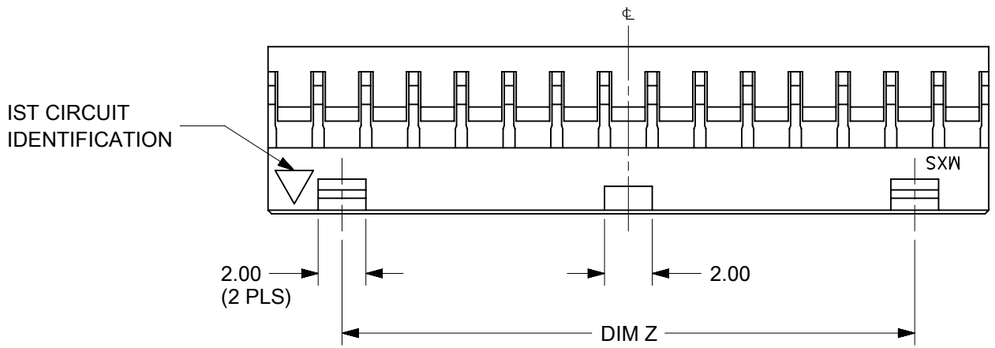

NOTES:
1. MATERIAL: GLASS-FILLED POLYESTER UL RATED 94V-0
   COLOR: BLACK
2. PART TO BE USED WITH CRIMP TERMINAL
   PART NUMBER 50394-8*** AND 87396-****
3. APPLICABLE WIRE RANGE:
   FOR 50394 SERIES, AWG #24 - #30,
   FOR 87396 SERIES, AWG #22 - #28.
4. WIRE INSULATION RANGE: DIAMETER 1.40MM MAXIMUM.
5. 30 CKT SHOWN FOR ILLUSTRATION ONLY.
6. MATES WITH: 87758, 87759, 87760, 87831, 87832, 151013, 151117, 151118, 151119, 151120 & 87833.

B11

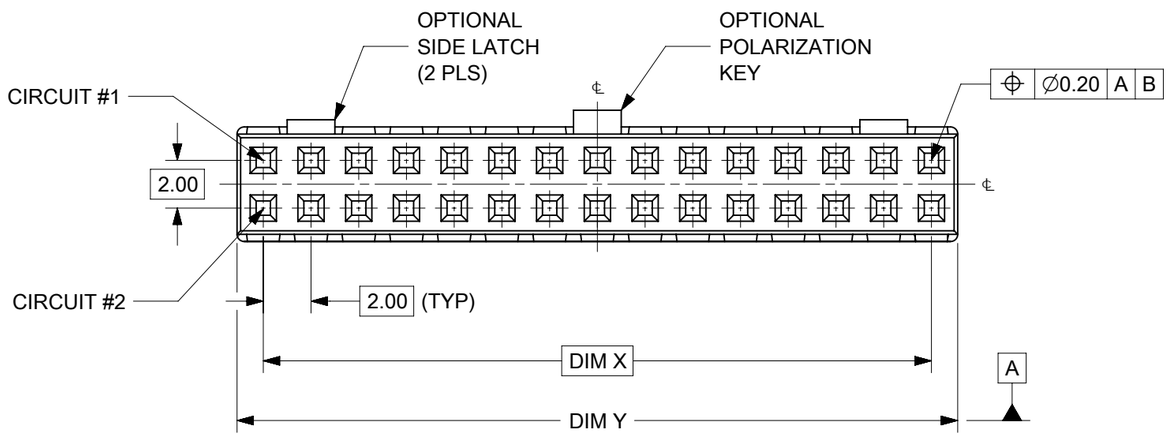

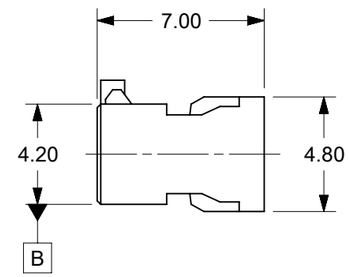

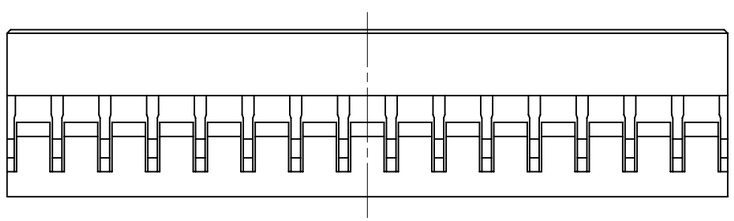

THIS DRAWING CONTAINS INFORMATION THAT IS PROPRIETARY TO MOLEX ELECTRONIC TECHNOLOGIES, LLC AND SHOULD NOT BE USED WITHOUT WRITTEN PERMISSION

FUNCTIONAL SYMBOLS	DIMENSION UNITS	SCALE
FA = 0	mm	NTS
FC = 0	GENERAL TOLERANCES (UNLESS SPECIFIED)	
FB = 0	ANGULAR TOL ± 3.0 °	
	4 PLACES ±	
DIVISIONAL SYMBOLS	3 PLACES ±	
	2 PLACES ± 0.2	
	1 PLACE ±	
	0 PLACES ±	
	DRAFT WHERE APPLICABLE MUST REMAIN WITHIN DIMENSIONS	

CURRENT REV DESC:

EC NO: 783899
DRWN: SUAIFR 2024/04/22
CHK'D: SUAIFR 2024/04/22
APPR: MRAMAKRISHNA 2024/04/22

INITIAL REVISION:
DRWN: SKTOH 1993/10/26
APPR: LBLEE 2014/07/22

molex

2MM GRID, WIRE TO BOARD
CONNECTOR, CRIMP RECEPT. HOUSING

PRODUCT CUSTOMER DRAWING

DOCUMENT NUMBER	DOC TYPE	DOC PART	REVISION
SD-51110-XX5X	PSD	001	B11

THIRD ANGLE PROJECTION	DRAWING	SERIES	MATERIAL NUMBER	CUSTOMER	SHEET NUMBER
	B-SIZE	51110	SEE TABLE	GENERAL MARKET	1 OF 2

DOCUMENT STATUS	P1	RELEASE DATE	2024/04/22 12:54:42

FORMAT: master-B-size
REVISION: J
DATE: 2020/01/14

WITHOUT CENTER POLARIZATION KEY & SIDE LATCHES

PART NUMBER	CKT SIZE	DIM X	DIM Y
51110-0450	4	2.00	4.20
51110-0650	6	4.00	6.20
51110-0850	8	6.00	8.20
51110-1050	10	8.00	10.20
51110-1250	12	10.00	12.20
51110-1450	14	12.00	14.20
51110-1650	16	14.00	16.20
51110-1850	18	16.00	18.20
51110-2050	20	18.00	20.20
51110-2250	22	20.00	22.20
51110-2450	24	22.00	24.20
51110-2650	26	24.00	26.20
51110-2850	28	26.00	28.20
51110-3050	30	28.00	30.20
51110-3250	32	30.00	32.20
51110-3450	34	32.00	34.20

WITH CENTER POLARIZATION KEY & SIDE LATCHES

PART NUMBER	CKT SIZE	DIM X	DIM Y	DIM Z
51110-1451	14	12.00	14.20	8.00
51110-1651	16	14.00	16.20	10.00
51110-1851	18	16.00	18.20	12.00
51110-2051	20	18.00	20.20	14.00
51110-2251	22	20.00	22.20	16.00
51110-2451	24	22.00	24.20	18.00
51110-2651	26	24.00	26.20	20.00
51110-2851	28	26.00	28.20	22.00
51110-3051	30	28.00	30.20	24.00
51110-3251	32	30.00	32.20	26.00
51110-3451	34	32.00	34.20	28.00

WITH CENTER POLARIZATION KEY

PART NUMBER	CKT SIZE	DIM X	DIM Y
51110-0452	4	2.00	4.20
51110-0652	6	4.00	6.20
51110-0851	8	6.00	8.20
51110-1051	10	8.00	10.20
51110-1251	12	10.00	12.20
51110-1452	14	12.00	14.20
51110-1652	16	14.00	16.20
51110-1852	18	16.00	18.20
51110-2052	20	18.00	20.20
51110-2252	22	20.00	22.20

PART NUMBER LEGEND:

51110 - * * 5 *

CIRCUIT SIZE

0 - WITHOUT CENTER POLARIZATION KEY AND SIDE LATCH.

1 - WITH CENTER POLARIZATION KEY AND SIDE LATCH.
(14 TO 34 CIRCUITS ONLY)
WITH CENTER POLARIZATION KEY ONLY.
(8 TO 12 CIRCUITS ONLY)

2 - WITH CENTER POLARIZATION KEY ONLY.
(4 TO 6 CIRCUITS AND 14 TO 22 CIRCUITS ONLY)

THIS DRAWING CONTAINS INFORMATION THAT IS PROPRIETARY TO MOLEX ELECTRONIC TECHNOLOGIES, LLC AND SHOULD NOT BE USED WITHOUT WRITTEN PERMISSION

FUNCTIONAL SYMBOLS: FA = 0, FC = 0, FD = 0
DIVISIONAL SYMBOLS

DIMENSION UNITS: mm
SCALE: NTS

GENERAL TOLERANCES (UNLESS SPECIFIED)

ANGULAR TOL	± 3.0 °
4 PLACES	±
3 PLACES	±
2 PLACES	± 0.2
1 PLACE	±
0 PLACES	±

DRAFT WHERE APPLICABLE MUST REMAIN WITHIN DIMENSIONS

CURRENT REV DESC:

EC NO: 783899
DRWN: SUAIFR 2024/04/22
CHK'D: SUAIFR 2024/04/22
APPR: MRAMAKRISHNA 2024/04/22

INITIAL REVISION:
DRWN: SKTOH 1993/10/26
APPR: LBLEE 2014/07/22

THIRD ANGLE PROJECTION
DRAWING: A3-SIZE
SERIES: 51110

molex

2MM GRID, WIRE TO BOARD
CONNECTOR, CRIMP RECEPT. HOUSING

PRODUCT CUSTOMER DRAWING

DOCUMENT NUMBER	DOC TYPE	DOC PART	REVISION
SD-51110-XX5X	PSD	001	B11

MATERIAL NUMBER	CUSTOMER	SHEET NUMBER
SEE TABLE	GENERAL MARKET	2 OF 2

DOCUMENT STATUS	P1	RELEASE DATE	2024/04/22 12:54:42

FORMAT: master_Sized-A3
REVISION: J
DATE: 2020/01/14