ITEM	MOLEX P/N	DESCRIPTION	QTY	UOM
A	2064610600	Micro-Fit Plus Rcpt Hsg 2X3	1	PC
B	2064620300	Micro-Fit Plus TPA 2X3	2	PC
C	2064600021	Micro-Fit Plus FemCrpTer 20-24AWG Tin Lu	6	PC
D	-	LEAD FREE SOLDER BAR SAC 305	AR	KG
PL	-	PART ID LABEL	1	PC

FROM	TO	WIRE SIZE	WIRE TYPE	COLOR
A-1	-	20 AWG	UL 1061	BLACK
A-2	-	20 AWG	UL 1061	BLACK
A-3	-	20 AWG	UL 1061	BLACK
A-4	-	20 AWG	UL 1061	BLACK
A-5	-	20 AWG	UL 1061	BLACK
A-6	-	20 AWG	UL 1061	BLACK

TABLE 1

LABEL ID	LABEL CONTENT	REMARK
PL	MOLEX PN MOLEX BATCH WK/YR	LABEL TEXT MUST BE 2MM MAX IN HEIGHT WITH ARIAL FONT AND WRAPPED IN FLAG TYPE ON A SINGLE WIRE.

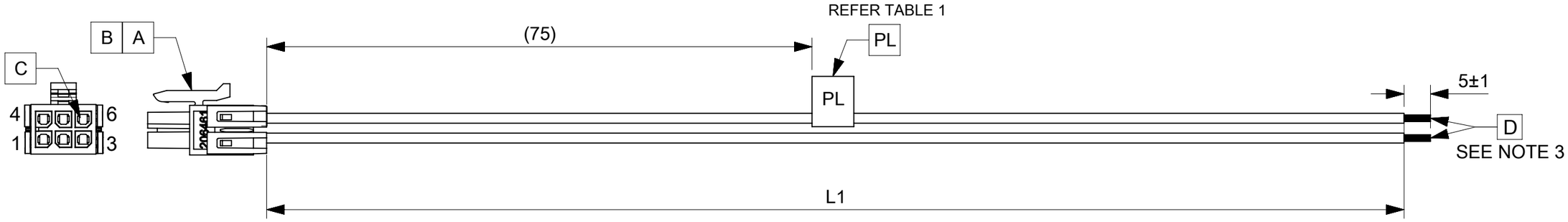

TABLE

FG PART #	L1	TITLE
2283641062	150±5	Micro-Fit Plus R-S 6ckt 150mmdisc Sn
2283641063	300±5	Micro-Fit Plus R-S 6ckt 300mmdisc Sn

NOTE:
1. CONNECTOR VIEW/CIRCUIT NOS SHOWN FROM THE MATING SIDE OF THE CONNECTOR, CONNECTOR VIEW IS SHOWN ONLY FOR REFERENCE. .
2. THE PRODUCT HAS TO MEET PERFORMANCE SPECIFICATION AS PER ES-36586-004.
3. FREE ENDS MUST BE STRIPPED, TWISTED & TINNED. TINNING DIA MUST BE 1.25MM MAX.

TESTING REQUIREMENT

TEST NAME/COMPONENT NAME	TEST PARAMETER	REQUIREMENT
Continuity/Short/Open	AS PER PIN OUT TABLE	100%

REVISION	CHANGE NOTE	EC NO	DATE
A	INITIAL RELEASE	804816	20/11/2024

REVISION HISTORY

THIS DRAWING CONTAINS INFORMATION THAT IS PROPRIETARY TO MOLEX ELECTRONIC TECHNOLOGIES, LLC AND SHOULD NOT BE USED WITHOUT WRITTEN PERMISSION

FUNCTIONAL SYMBOLS: FA = 0, FC = 0, FD = 0

DIVISIONAL SYMBOLS

DIMENSION UNITS: mm
SCALE: NTS

GENERAL TOLERANCES (UNLESS SPECIFIED)

ANGULAR TOL	±	°
4 PLACES	±	
3 PLACES	±	
2 PLACES	±	
1 PLACE	±	
0 PLACES	±	

DRAFT WHERE APPLICABLE MUST REMAIN WITHIN DIMENSIONS

CURRENT REV DESC:

EC NO: 804816
DRWN: CHIDAG1 2024/10/03
CHK'D: NAVEEB6 2024/11/20
APPR: RPAI01 2024/11/21

INITIAL REVISION:
DRWN: CHIDAG1 2024/10/03
APPR: RPAI01 2024/11/21

THIRD ANGLE PROJECTION | DRAWING: A3-SIZE | SERIES: 228364

molex

SEE TABLE

PRODUCT CUSTOMER DRAWING

DOCUMENT NUMBER	DOC TYPE	DOC PART	REVISION
2283641062	PSD	000	A

MATERIAL NUMBER	CUSTOMER	SHEET NUMBER
SEE TABLE	GENERAL MARKET	1 OF 1

DOCUMENT STATUS	P1	RELEASE DATE	2024/11/21 05:44:06

FORMAT: master-Sized-A3
REVISION: J1
DATE: 2021/05/05