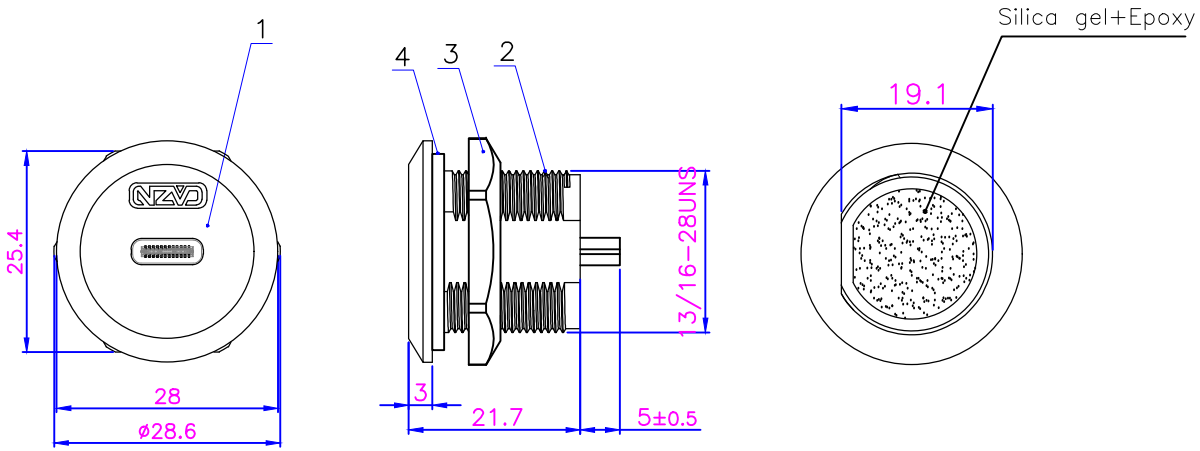

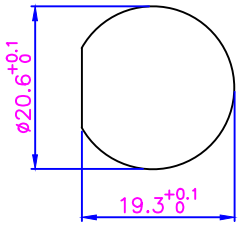

Hole size

No.	Specification	Material	Treat	Unit	Q'ty
4	E13 front plate rear water ring 24.8*20.6*1.5	silica gel	black	pc	1
3	E13 flange nut	PA66	Black	pc	1
2	TYPE C panel type board front installation female plastic housing	PA66	black	pc	1
1	TYPE C Double Female Head+PCB Board	/	gold plated	pc	1

Technical specifications:		Materials:	
Mating cycles::	≥500	Contact material:	Phosphor bronze / brass
Rated current:	3.25A	Enclosure, insulating parts:	High performance engineering plastics
Temperature range:	-40℃～80℃	Waterproof ring:	silica gel
Waterproof grade:	IP65/IP67		
Contact resistance:	＜40mΩ		
Insulation resistance: :	＞100MΩ		
Withstand voltage:			
Flame retardant grade:	UL94-V0		

GENERAL TOLERANCE (UNLESS SPECIFIED)					
≤10 ±0.1	DWN	Junming.Hu 2024.09.10		TIGER Power Supplies	
＜10~≤20 ±0.2	CHK				
＜20~≤50 ±0.5	APVD			TITLE	USB-C-PANEL-SKT-B2
Angle ±1°	UNIT	MM	REV A	PART NO	USB-C-PANEL-SKT-B2
视 角 THIRD ANGLE	SIZE	A4	SHEET 1 OF 1		www.TigerPowerSupplies.com