© 2024 TE Connectivity. All Rights Reserved.

REVISIONS					
P	LTR	DESCRIPTION	DATE	DWN	APVD
	A	INITIAL RELEASE	08JUL2024	J.G	Z.Z
	A1	ECN-25-360853	23DEC2025	J.G	C.W

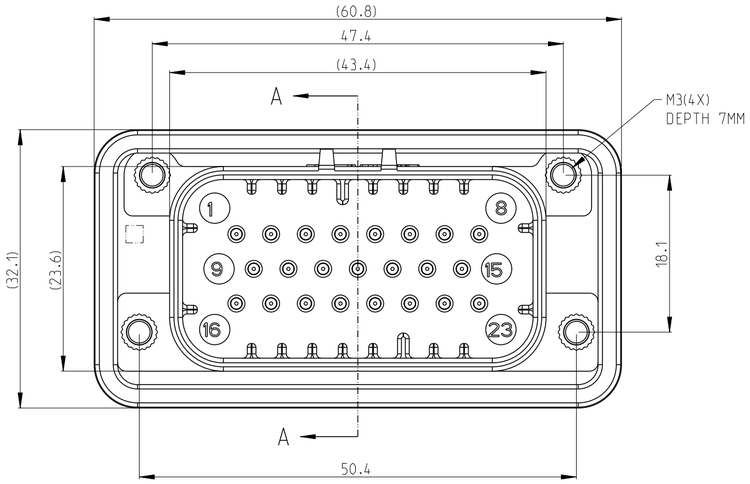

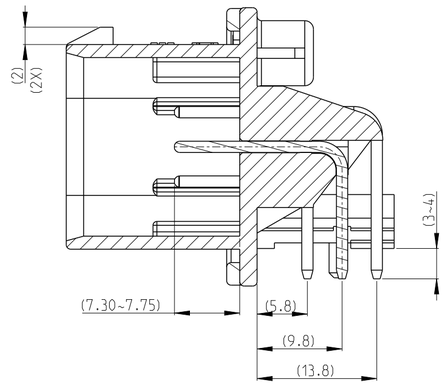

SECTION A-A

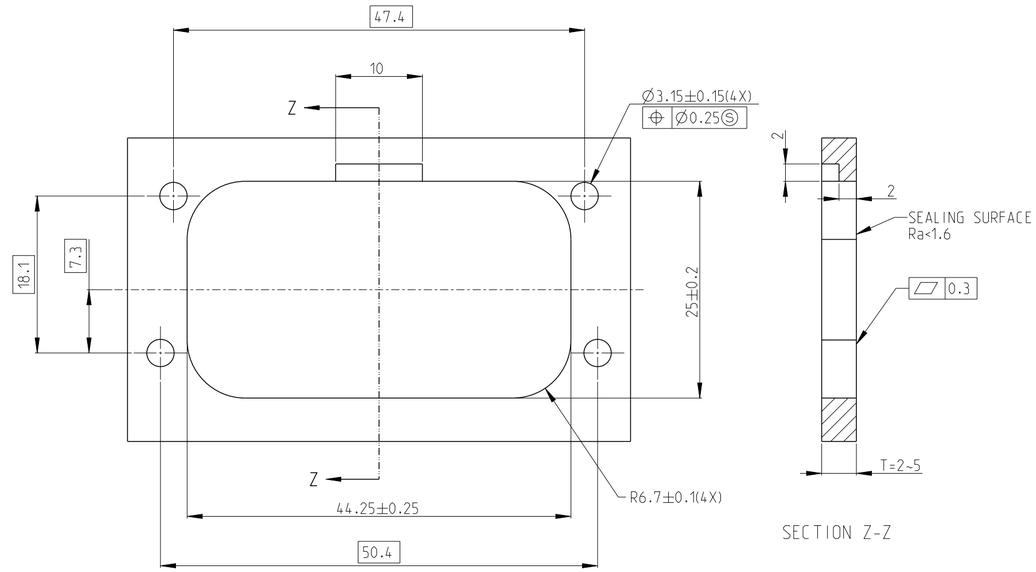

SECTION Z-Z

RECOMMENDED PANEL LAYOUT

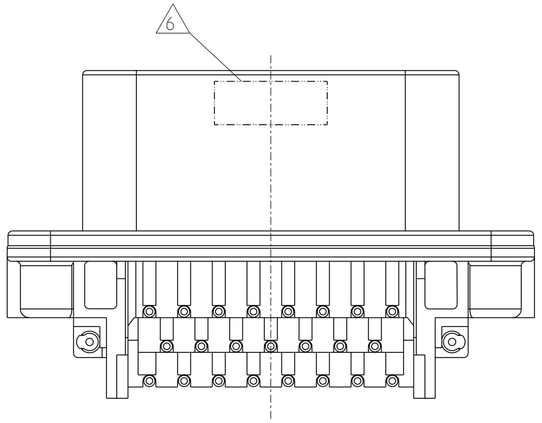

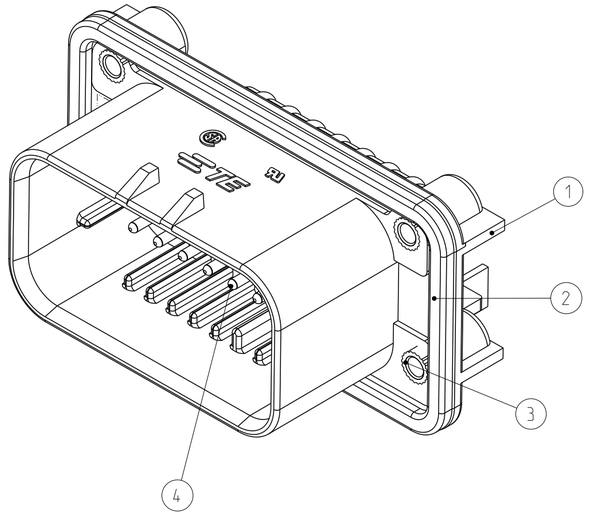

1. MATERIAL: SEE BELOW TABLE
2. RECOMMEND MOUNTING SCREW: M3XL(L=5+T).
   T=THICKNESS OF PANEL
3. SCREW TORQUE: REFER TO 114-161142
4. NO DEFINED DIMENSIONS ACCORDING TO 3D MODEL
5. MATED WITH TE PLUG: 770680-1 OR 2455016-1
6. D/C IN THIS LOCATION USING 5 DIGIT CODE
   FIRST 2 DIGITS = YEAR
   SECOND 2 DIGITS = WEEK
   LAST DIGIT = DAY
7. RECOMMENDED WAVE SOLDER PROCESS: 260°C(MAX.) FOR 3~5S MAX.

RECOMMENDED PCB LAYOUT

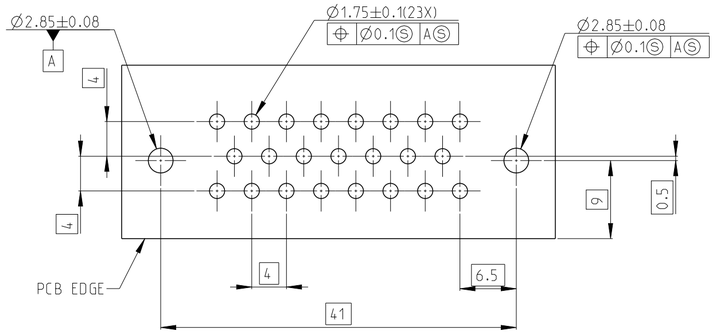

PCB THICKNESS 1.57MM

23	-	GOLD PLATED	BRASS	PIN	4
-	23	TIN PLATED	BRASS	PIN	
4	4	Zn-Ni PLATED	STEEL	BUSHING(M3)	3
1	1	NA	SILICONE	GASKET	2
1	1	BLACK	PBT GF30	23P HOUSING	1
1-2489008-1	2489008-1	FINISH/COLOR	MATERIAL	DESCRIPTION	ITEM

THIS DRAWING IS A CONTROLLED DOCUMENT.

DIMENSIONS: mm

TOLERANCES UNLESS OTHERWISE SPECIFIED:
0 PLC ±
1 PLC ±0.1
2 PLC ±0.01
3 PLC ±0.001
4 PLC ±0.0001
ANGLES ±

MATERIAL -
FINISH -

DWN J.GU 08JUL2024
CHK C.WAN 08JUL2024
APVD Z.ZHOU 08JUL2024
PRODUCT SPEC 108-1329
APPLICATION SPEC 114-161142
WEIGHT -

TE Connectivity

NAME AMPSEAL 23P WITH BUSHING
-

SIZE A2 | CAGE CODE 00779 | DRAWING NO C-2489008 | RESTRICTED TO -

CUSTOMER DRAWING | SCALE 1:1 | SHEET 1 OF 1 | REV A1